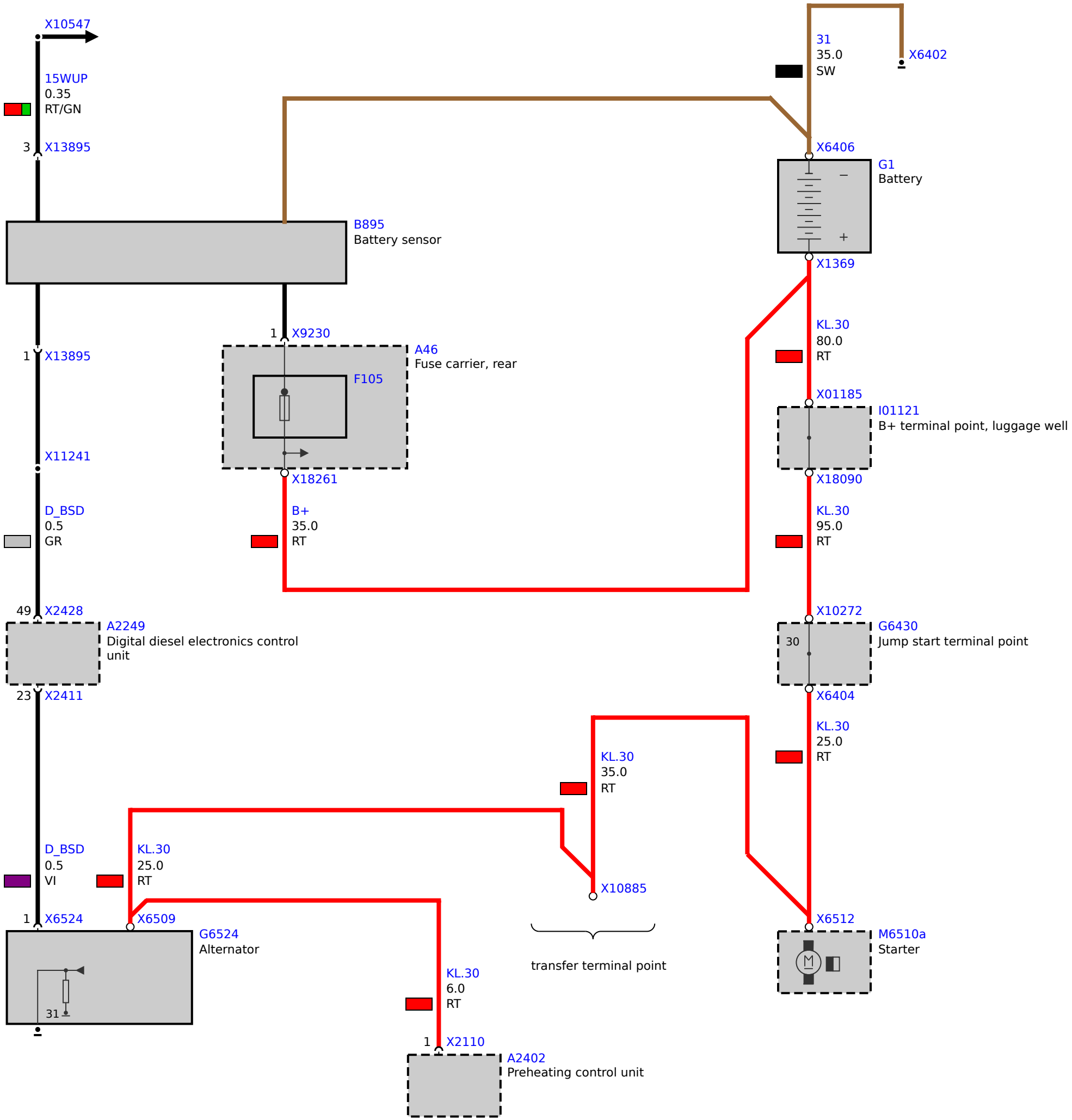
X10547
15WUP
0.35
RT/GN
3
X13895
B895
Battery sensor
1
X13895
1
X9230
A46
Fuse carrier, rear
F105
X11241
X18261
D_BSD
0.5
GR
B+
35.0
RT
49
X2428
A2249
Digital diesel electronics control unit
23
X2411
31
35.0
SW
X6402
X6406
G1
Battery
X1369
KL.30
80.0
RT
X01185
I01121
B+ terminal point, luggage well
X18090
KL.30
95.0
RT
X10272
30
G6430
Jump start terminal point
X6404
KL.30
25.0
RT
KL.30
35.0
RT
X10885
transfer terminal point
D_BSD
0.5
VI
KL.30
25.0
RT
1
X6524
X6509
G6524
Alternator
31
KL.30
6.0
RT
1
X2110
A2402
Preheating control unit
X6512
M6510a
Starter