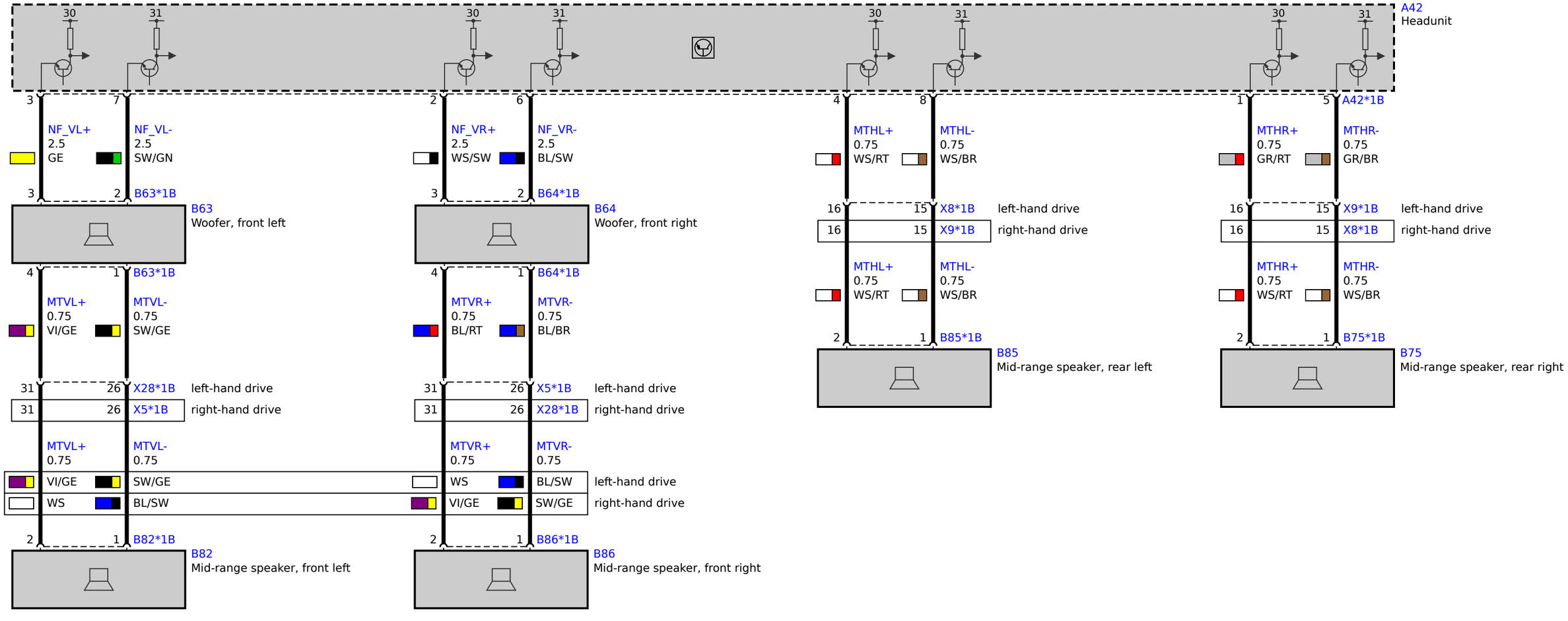
A42
Headunit
30
31
3
7
NF_VL+
2.5
GE
NF_VL-
2.5
SW/GN
3
2
B63*1B
B63
Woofer, front left
2
6
NF_VR+
2.5
WS/SW
NF_VR-
2.5
BL/SW
3
2
B64*1B
B64
Woofer, front right
4
8
MTHL+
0.75
WS/RT
MTHL-
0.75
WS/BR
16
15
X8*1B
left-hand drive
16
15
X9*1B
right-hand drive
MTHL+
0.75
WS/RT
MTHL-
0.75
WS/BR
2
1
B85*1B
B85
Mid-range speaker, rear left
1
5
A42*1B
MTHR+
0.75
GR/RT
MTHR-
0.75
GR/BR
16
15
X9*1B
left-hand drive
16
15
X8*1B
right-hand drive
MTHR+
0.75
WS/RT
MTHR-
0.75
WS/BR
2
1
B75*1B
B75
Mid-range speaker, rear right
4
1
B63*1B
MTVL+
0.75
VI/GE
MTVL-
0.75
SW/GE
31
26
X28*1B
left-hand drive
31
26
X5*1B
right-hand drive
4
1
B64*1B
MTVR+
0.75
BL/RT
MTVR-
0.75
BL/BR
31
26
X5*1B
left-hand drive
31
26
X28*1B
right-hand drive
MTVL+
0.75
MTVL-
0.75
MTVR+
0.75
MTVR-
0.75
VI/GE
SW/GE
WS
BL/SW
left-hand drive
WS
BL/SW
VI/GE
SW/GE
right-hand drive
2
1
B82*1B
B82
Mid-range speaker, front left
2
1
B86*1B
B86
Mid-range speaker, front right