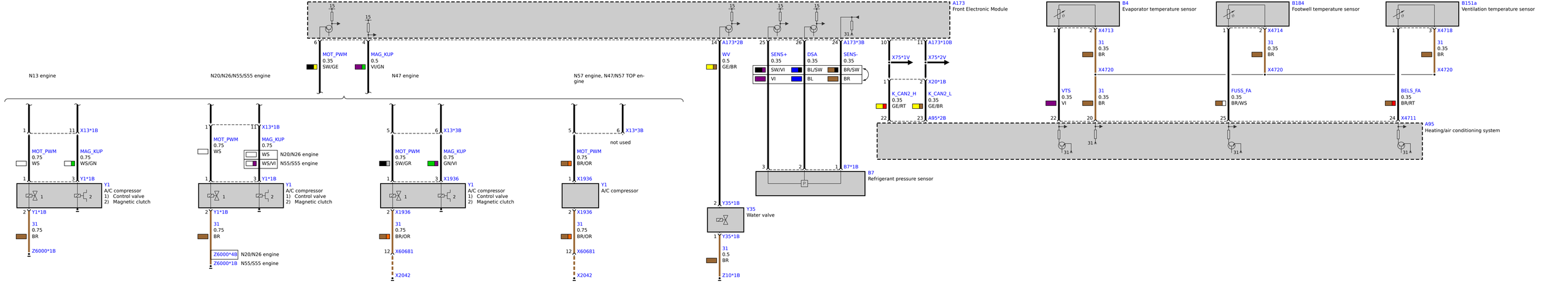
A173
Front Electronic Module
B4
Evaporator temperature sensor
B184
Footwell temperature sensor
B151a
Ventilation temperature sensor
MOT_PWM
0.35
SW/GE
MAG_KUP
0.5
VI/GN
N13 engine
N20/N26/N55/S55 engine
N47 engine
N57 engine, N47/N57 TOP engine
A173*2B
WV
0.5
GE/BR
SENS+
0.35
SW/VI
VI
DSA
0.35
BL/SW
BL
SENS-
0.35
BR/SW
BR
A173*3B
X75*1V
X75*2V
A173*10B
X20*1B
K_CAN2_H
0.35
GE/RT
K_CAN2_L
0.35
GE/BR
A95*2B
X4713
X4714
X4471B
X4720
31
0.35
BR
VTS
0.35
VI
FUSS_FA
0.35
BR/WS
BELS_FA
0.35
BR/RT
X4711
A95
Heating/air conditioning system
B7*1B
B7
Refrigerant pressure sensor
Y35*1B
Y35
Water valve
Z10*1B
X13*1B
MOT_PWM
0.75
WS
MAG_KUP
0.75
WS/GN
Y1*1B
Y1
A/C compressor
1) Control valve
2) Magnetic clutch
Z6000*1B
WS/VI
N20/N26 engine
N55/S55 engine
Z6000*4B
X13*3B
SW/GR
GN/VI
X1936
BR/OR
not used
X60681
X2042