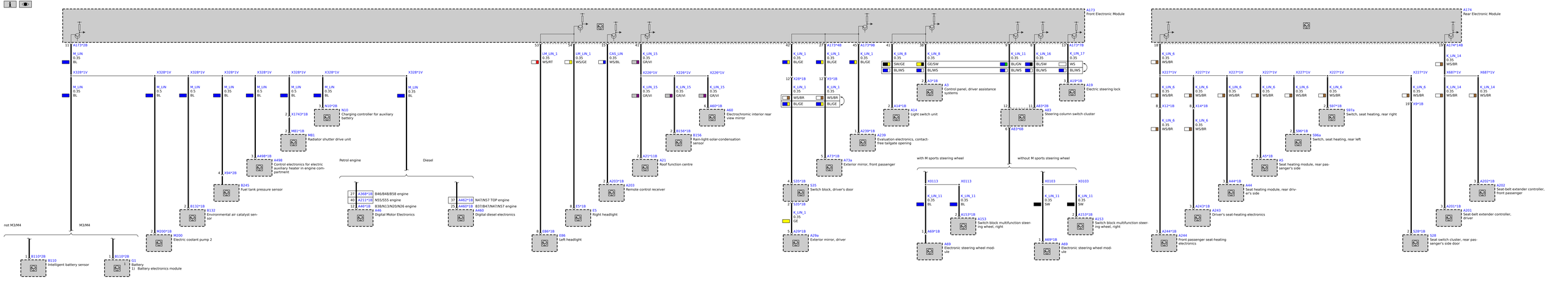
A171
Front Electronic Module
A174
Rear Electronic Module
A173*2B
M_LIN 0.35 BL
X328*1V
M_LIN 0.5 BL
M_LIN 0.35 BL
X1743*1B
N10*2B
N10
Charging controller for auxiliary battery
M81*1B
M81
Radiator shutter drive unit
A498*1B
A498
Control electronics for electric auxiliary heater in engine compartment
X94*2B
B245
Fuel tank pressure sensor
B132*1B
B132
Environmental air catalyst sensor
A200*1B
A200
Electric coolant pump 2
Petrol engine
Diesel
A398*1B
B46/B48/B58 engine
A211*1B
N55/S55 engine
A469*1B
B38/N13/N20/N26 engine
A46
Digital Motor Electronics
A462*1B
N47/N57 TOP engine
A460*1B
B37/B47/N47/N57 engine
A460
Digital diesel electronics
not M3/M4
M3/M4
B110*2B
B110
Intelligent battery sensor
B110*2B
G1
Battery
1) Battery electronics module
LM_LIN_1 0.35 WS/RT
LM_LIN_1 0.35 WS/GE
CAS_LIN 0.35 WS/BL
K_LIN_15 0.35 GR/VI
X226*1V
K_LIN_15 0.35 GR/VI
A203*1B
A203
Remote control receiver
A21*11B
A21
Roof function centre
A60*1B
A60
Electrochromic interior rear view mirror
B156*1B
B156
Rain-light-solar-condensation sensor
E5*1B
E5
Right headlight
E86*1B
E86
Left headlight
K_LIN_1 0.35 BL/GE
X28*1B
X5*1B
K_LIN_1 0.35 WS/BR BL/GE
A73*1B
A73a
Exterior mirror, front passenger
S35*1B
S35
Switch block, driver's door
S35*1B
K_LIN_1 0.35 GE
A29*1B
A29a
Exterior mirror, driver
A239*1B
A239
Evaluation electronics, contact-free tailgate opening
K_LIN_8 0.35 SW/GE BL/WS
K_LIN_8 0.35 GE/SW BL/WS
K_LIN_11 0.35 BL/GN BL/WS
K_LIN_16 0.35 BL/SW BL/WS
K_LIN_17 0.35 WS BL/WS
A3*1B
A3
Control panel, driver assistance systems
A14*1B
A14
Light switch unit
A19*1B
A19
Electric steering lock
A83*2B
A83
Steering column switch cluster
A83*6B
with M sports steering wheel
without M sports steering wheel
X0113
K_LIN_11 0.35 BL
A153*1B
A153
Switch block multifunction steering wheel, right
A69*1B
A69
Electronic steering wheel module
X0103
K_LIN_11 0.35 SW
A153*3B
A153
Switch block multifunction steering wheel, right
A69*1B
A69
Electronic steering wheel module
K_LIN_6 0.35 WS/BR
X227*1V
K_LIN_6 0.35 WS/BR
X12*1B
X14*1B
A44*1B
A44
Seat heating module, rear driver's side
A243*1B
A243
Driver's seat-heating electronics
A244*1B
A244
Front passenger seat-heating electronics
S97*1B
S97a
Switch, seat heating, rear right
S96*1B
S96a
Switch, seat heating, rear left
A5*1B
A5
Seat heating module, rear passenger's side
X49*1B
S28*1B
S28
Seat switch cluster, rear passenger's side door
A174*14B
K_LIN_14 0.35 WS/BR
X687*1V
A202*1B
A202
Seat-belt extender controller, front passenger
A201*1B
A201
Seat-belt extender controller, driver