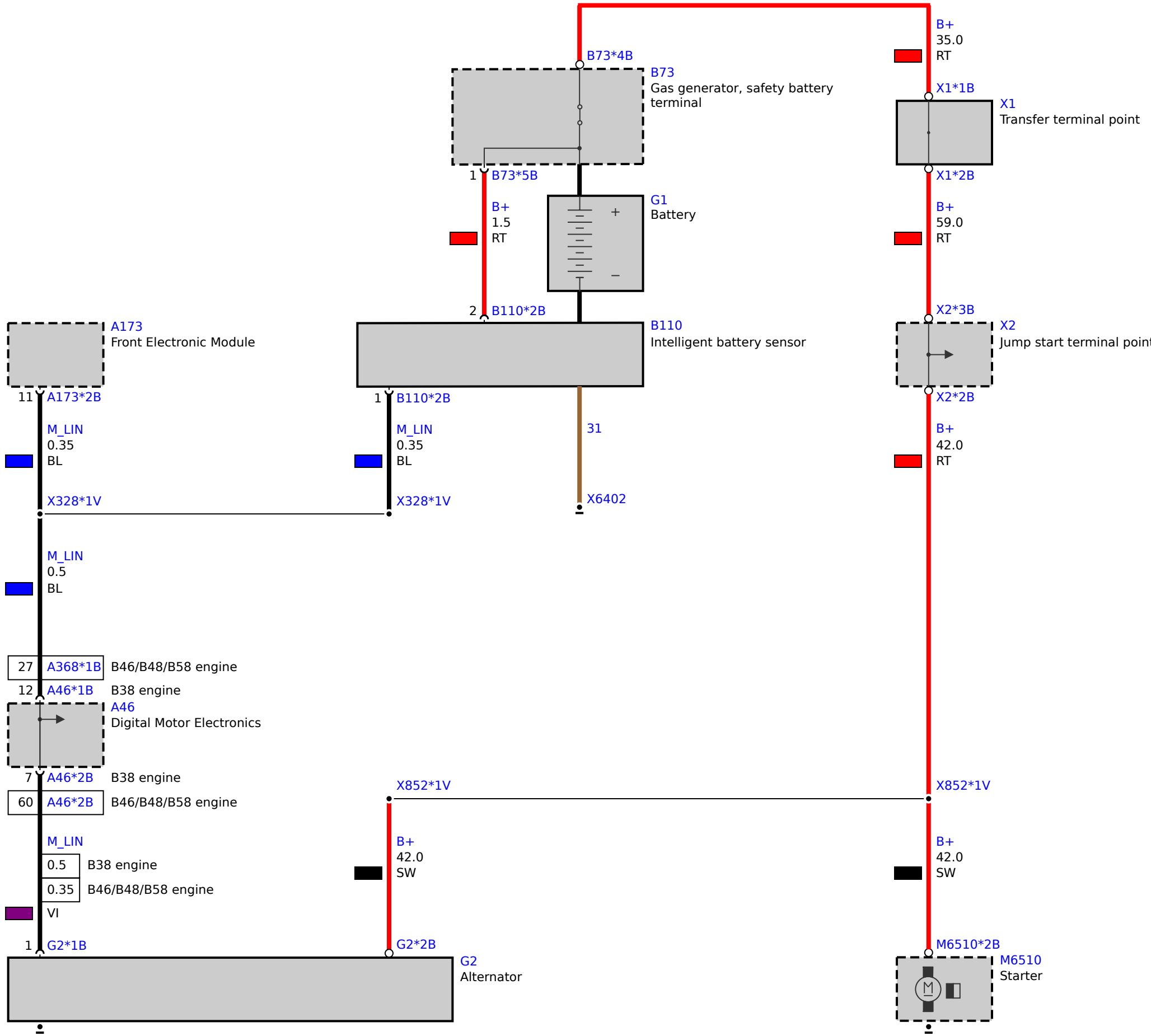
B73*4B
B73
Gas generator, safety battery terminal
B+
35.0
RT
X1*1B
X1
Transfer terminal point
1
B73*5B
X1*2B
B+
1.5
RT
G1
Battery
B+
59.0
RT
2
B110*2B
X2*3B
A173
Front Electronic Module
B110
Intelligent battery sensor
X2
Jump start terminal point
11
A173*2B
1
B110*2B
X2*2B
M_LIN
0.35
BL
M_LIN
0.35
BL
31
B+
42.0
RT
X328*1V
X328*1V
X6402
M_LIN
0.5
BL
27
A368*1B
B46/B48/B58 engine
12
A46*1B
B38 engine
A46
Digital Motor Electronics
7
A46*2B
B38 engine
60
A46*2B
B46/B48/B58 engine
X852*1V
X852*1V
M_LIN
0.5
B38 engine
0.35
B46/B48/B58 engine
VI
B+
42.0
SW
B+
42.0
SW
1
G2*1B
G2*2B
M6510*2B
G2
Alternator
M6510
Starter