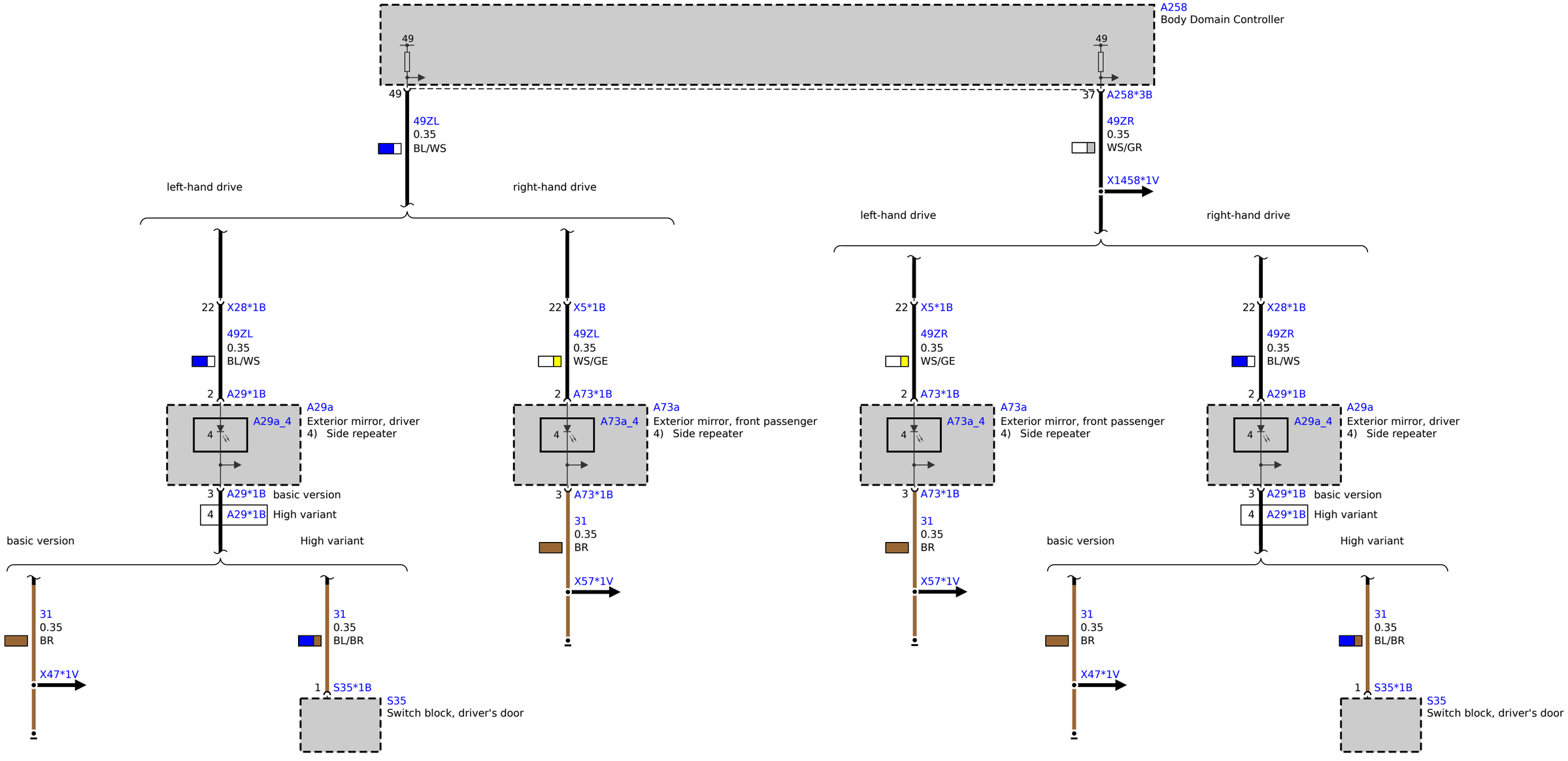
A258
Body Domain Controller
49
49
49
37
A258*3B
49ZL
0.35
BL/WS
49ZR
0.35
WS/GR
X1458*1V
left-hand drive
right-hand drive
left-hand drive
right-hand drive
22
X28*1B
49ZL
0.35
BL/WS
2
A29*1B
A29a
A29a_4
Exterior mirror, driver
4) Side repeater
3
A29*1B
basic version
4
A29*1B
High variant
22
X5*1B
49ZL
0.35
WS/GE
2
A73*1B
A73a
A73a_4
Exterior mirror, front passenger
4) Side repeater
3
A73*1B
31
0.35
BR
X57*1V
22
X5*1B
49ZR
0.35
WS/GE
2
A73*1B
A73a
A73a_4
Exterior mirror, front passenger
4) Side repeater
3
A73*1B
31
0.35
BR
X57*1V
22
X28*1B
49ZR
0.35
BL/WS
2
A29*1B
A29a
A29a_4
Exterior mirror, driver
4) Side repeater
3
A29*1B
basic version
4
A29*1B
High variant
basic version
High variant
31
0.35
BR
X47*1V
31
0.35
BL/BR
1
S35*1B
S35
Switch block, driver's door
basic version
High variant
31
0.35
BR
X47*1V
31
0.35
BL/BR
1
S35*1B
S35
Switch block, driver's door