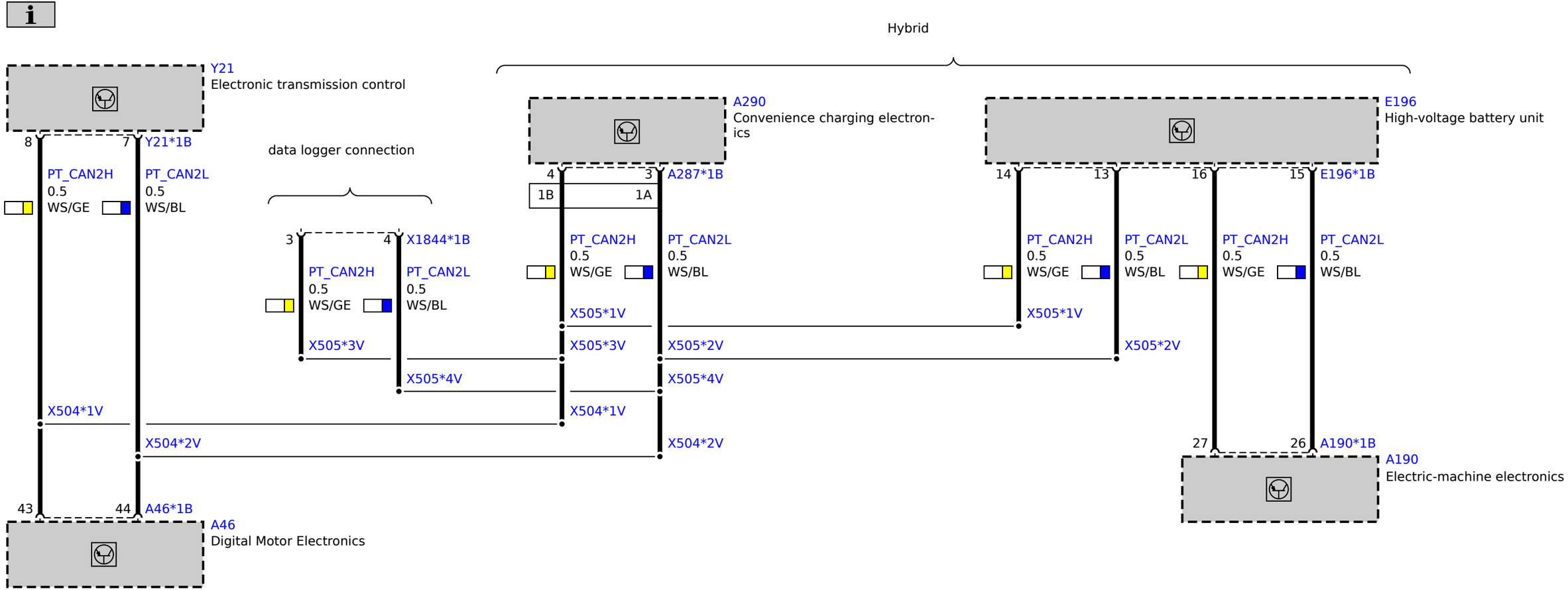
Hybrid
Y21
Electronic transmission control
8
7
Y21*1B
PT_CAN2H
0.5
WS/GE
PT_CAN2L
0.5
WS/BL
data logger connection
3
4
X1844*1B
PT_CAN2H
0.5
WS/GE
PT_CAN2L
0.5
WS/BL
X505*3V
X505*4V
X504*1V
X504*2V
43
44
A46*1B
A46
Digital Motor Electronics
A290
Convenience charging electron-
ics
4
3
A287*1B
1B
1A
PT_CAN2H
0.5
WS/GE
PT_CAN2L
0.5
WS/BL
X505*1V
X505*3V
X505*2V
X505*4V
X504*1V
X504*2V
E196
High-voltage battery unit
14
13
16
15
E196*1B
PT_CAN2H
0.5
WS/GE
PT_CAN2L
0.5
WS/BL
PT_CAN2H
0.5
WS/GE
PT_CAN2L
0.5
WS/BL
X505*1V
X505*2V
27
26
A190*1B
A190
Electric-machine electronics