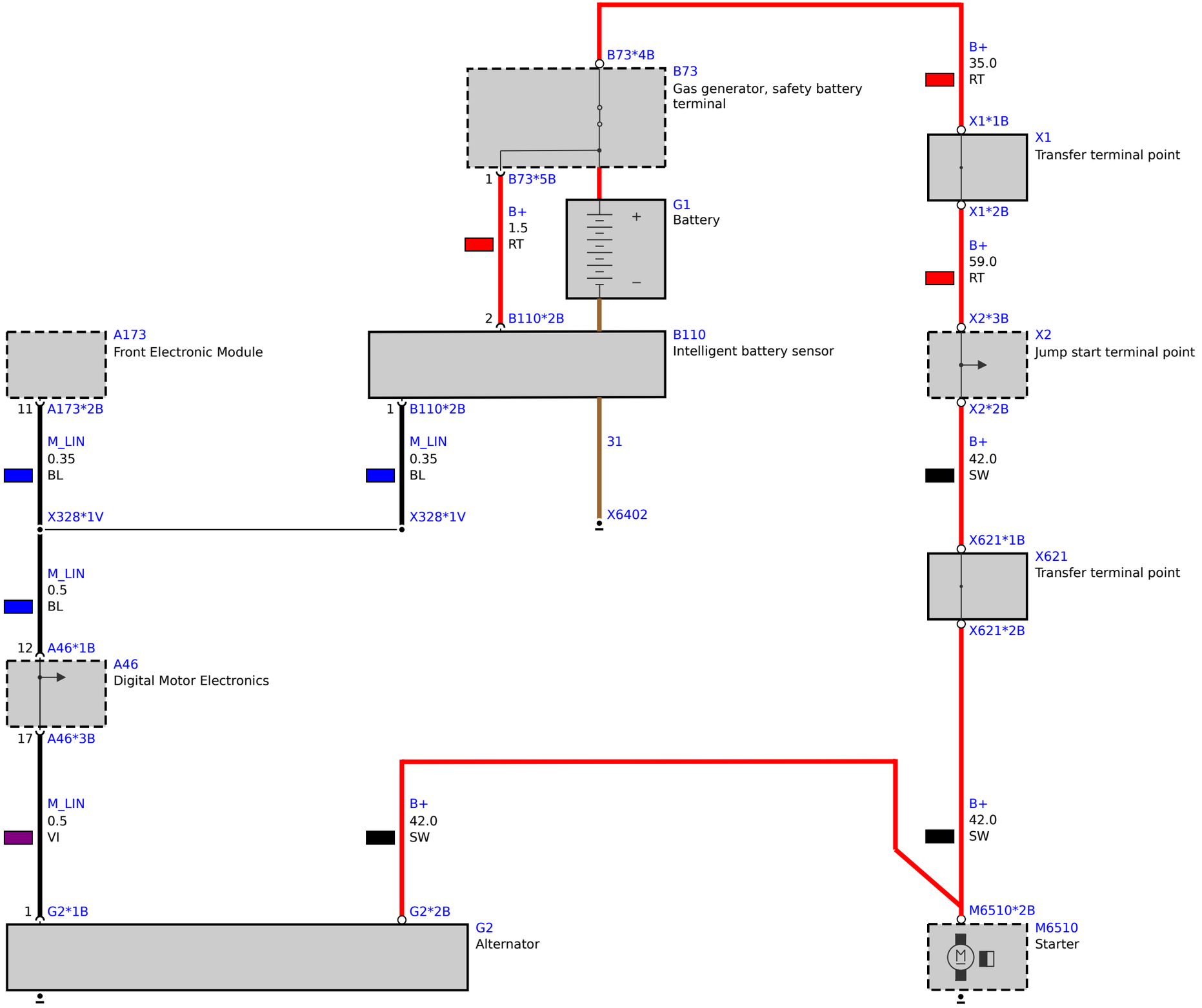
B73*4B
B73
Gas generator, safety battery terminal
1
B73*5B
B+
1.5
RT
G1
Battery
2
B110*2B
B110
Intelligent battery sensor
31
X6402
B+
35.0
RT
X1*1B
X1
Transfer terminal point
X1*2B
B+
59.0
RT
X2*3B
X2
Jump start terminal point
X2*2B
B+
42.0
SW
X621*1B
X621
Transfer terminal point
X621*2B
A173
Front Electronic Module
11
A173*2B
M_LIN
0.35
BL
1
B110*2B
M_LIN
0.35
BL
X328*1V
X328*1V
M_LIN
0.5
BL
12
A46*1B
A46
Digital Motor Electronics
17
A46*3B
M_LIN
0.5
VI
B+
42.0
SW
B+
42.0
SW
1
G2*1B
G2*2B
G2
Alternator
M6510*2B
M6510
Starter