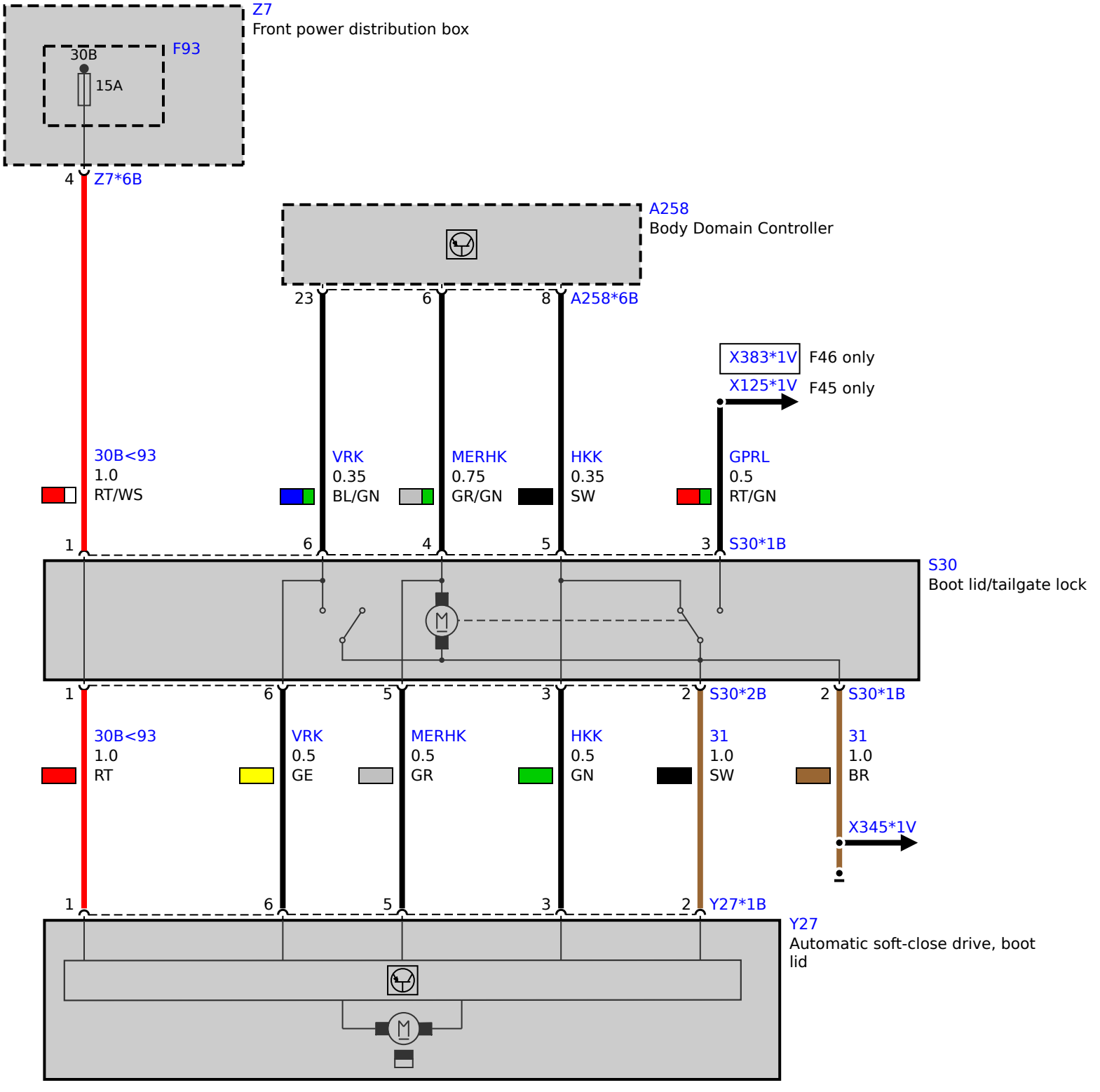
Z7
Front power distribution box
F93
30B
15A
4
Z7*6B
A258
Body Domain Controller
23
6
8
A258*6B
X383*1V
F46 only
X125*1V
F45 only
30B<93
1.0
RT/WS
VRK
0.35
BL/GN
MERHK
0.75
GR/GN
HKK
0.35
SW
GPRL
0.5
RT/GN
1
6
4
5
3
S30*1B
S30
Boot lid/tailgate lock
1
6
5
3
2
S30*2B
2
S30*1B
30B<93
1.0
RT
VRK
0.5
GE
MERHK
0.5
GR
HKK
0.5
GN
31
1.0
SW
31
1.0
BR
X345*1V
1
6
5
3
2
Y27*1B
Y27
Automatic soft-close drive, boot lid