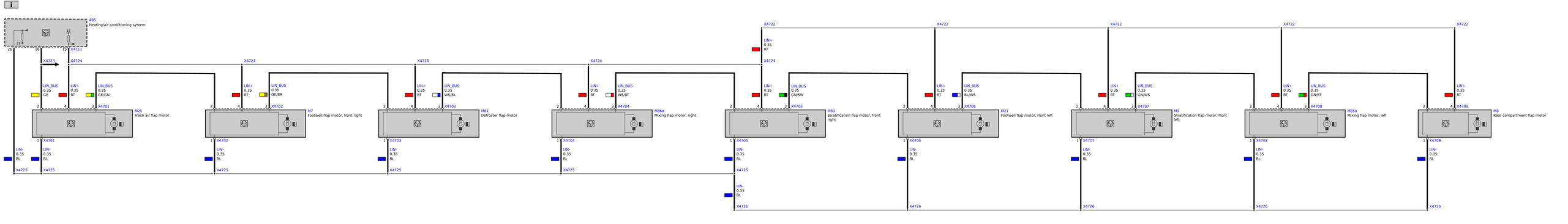
A95
Heating/air conditioning system
26
16
15
X4711
X4723
X4724
LIN_BUS
0.35
GE
LIN+
0.35
RT
LIN_BUS
0.35
GE/GN
X4701
M25
Fresh air flap motor
LIN-
0.35
BL
X4725
LIN_BUS
0.35
GE/BR
X4702
M7
Footwell flap motor, front right
LIN_BUS
0.35
WS/BL
X4703
M61
Defroster flap motor
LIN_BUS
0.35
WS/RT
X4704
M86a
Mixing flap motor, right
X4722
LIN+
0.35
RT
LIN_BUS
0.35
GN/SW
X4705
M69
Stratification flap motor, front right
X4726
LIN_BUS
0.35
BL/WS
X4706
M21
Footwell flap motor, front left
LIN_BUS
0.35
GN/WS
X4707
M9
Stratification flap motor, front left
LIN_BUS
0.35
GN/RT
X4708
M85a
Mixing flap motor, left
X4709
M8
Rear compartment flap motor