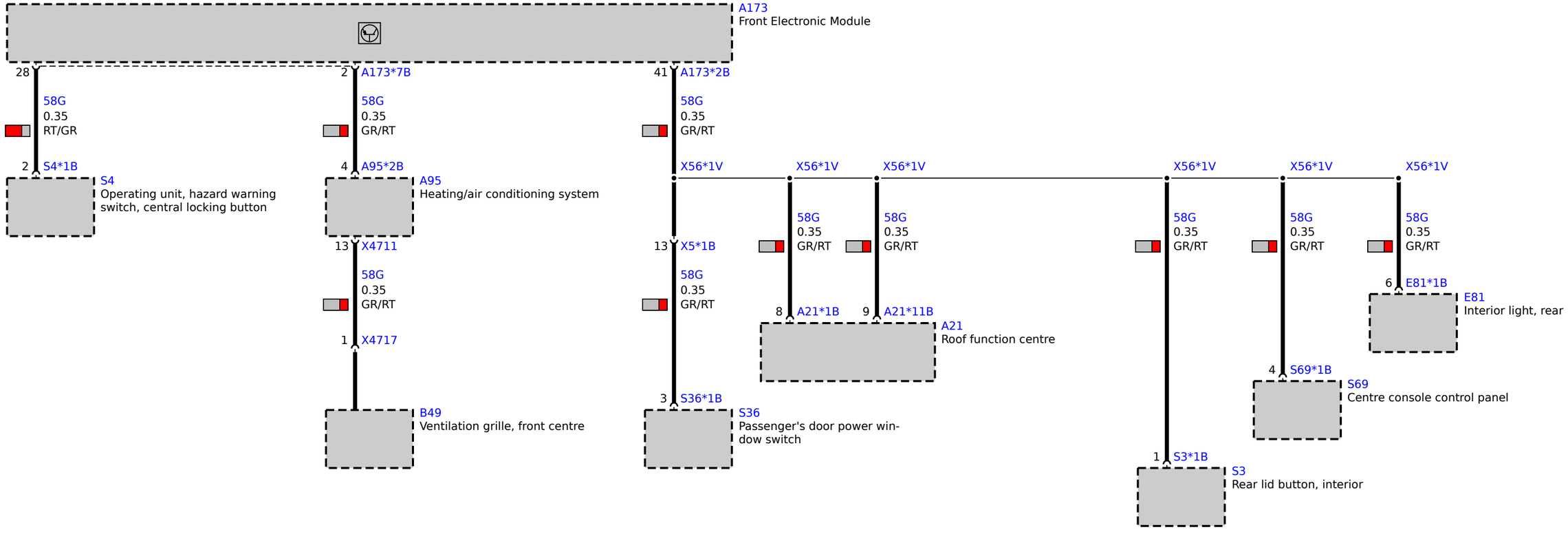
A173
Front Electronic Module
28
58G
0.35
RT/GR
2
S4*1B
S4
Operating unit, hazard warning switch, central locking button
2
A173*7B
58G
0.35
GR/RT
4
A95*2B
A95
Heating/air conditioning system
13
X4711
58G
0.35
GR/RT
1
X4717
B49
Ventilation grille, front centre
41
A173*2B
58G
0.35
GR/RT
X56*1V
13
X5*1B
58G
0.35
GR/RT
3
S36*1B
S36
Passenger's door power window switch
X56*1V
58G
0.35
GR/RT
8
A21*1B
X56*1V
58G
0.35
GR/RT
9
A21*11B
A21
Roof function centre
X56*1V
58G
0.35
GR/RT
1
S3*1B
S3
Rear lid button, interior
X56*1V
58G
0.35
GR/RT
4
S69*1B
S69
Centre console control panel
X56*1V
58G
0.35
GR/RT
6
E81*1B
E81
Interior light, rear