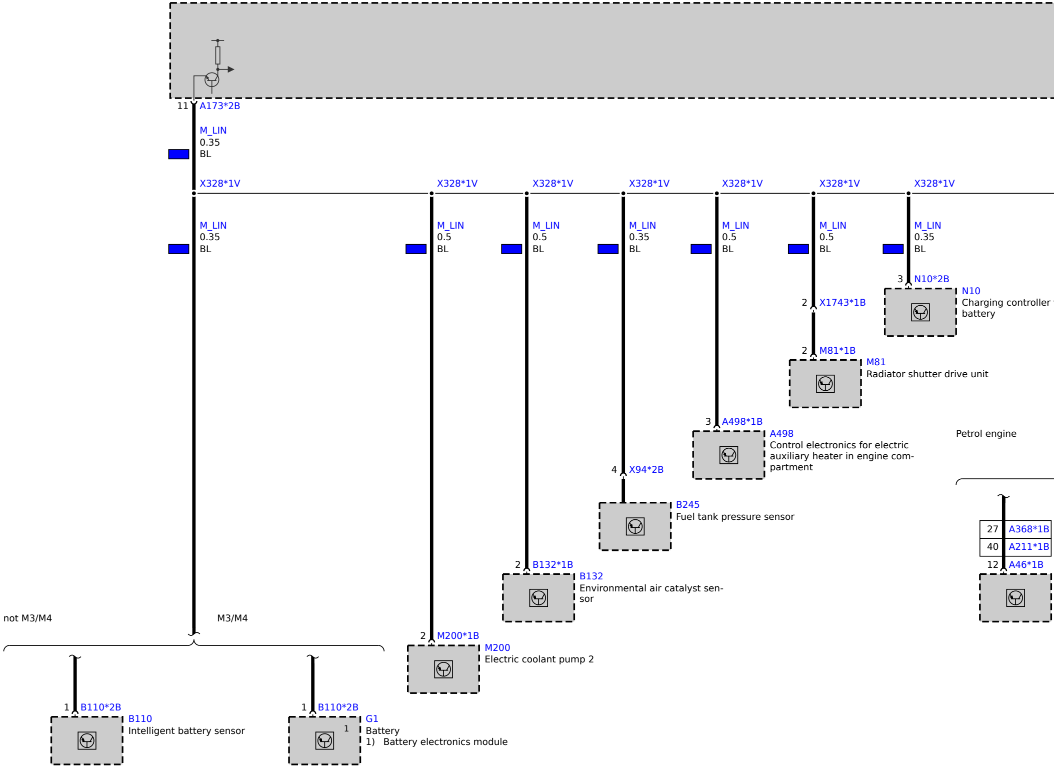
11
A173*2B
M_LIN
0.35
BL
X328*1V
M_LIN
0.35
BL
X328*1V
M_LIN
0.5
BL
X328*1V
M_LIN
0.5
BL
X328*1V
M_LIN
0.35
BL
X328*1V
M_LIN
0.5
BL
X328*1V
M_LIN
0.5
BL
X328*1V
M_LIN
0.35
BL
3
N10*2B
N10
Charging controller
battery
2
X1743*1B
2
M81*1B
M81
Radiator shutter drive unit
3
A498*1B
A498
Control electronics for electric auxiliary heater in engine compartment
Petrol engine
4
X94*2B
B245
Fuel tank pressure sensor
27
A368*1B
40
A211*1B
12
A46*1B
2
B132*1B
B132
Environmental air catalyst sensor
not M3/M4
M3/M4
2
M200*1B
M200
Electric coolant pump 2
1
B110*2B
B110
Intelligent battery sensor
1
B110*2B
1
G1
Battery
1) Battery electronics module

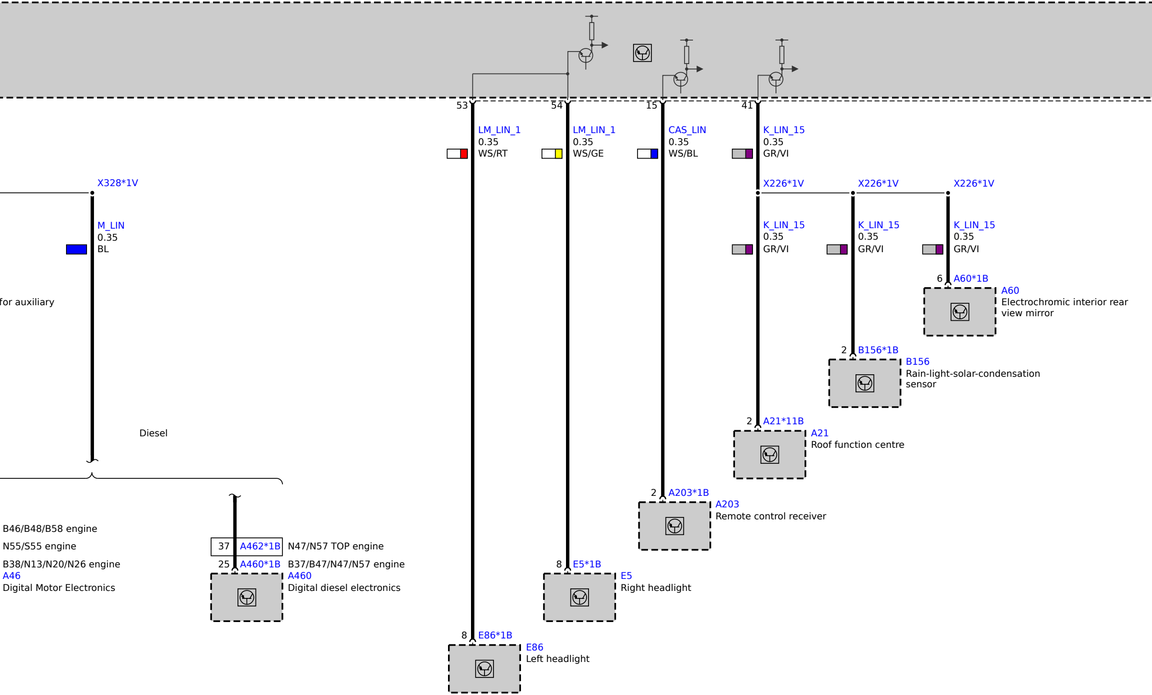
53
LM_LIN_1
0.35
WS/RT
54
LM_LIN_1
0.35
WS/GE
15
CAS_LIN
0.35
WS/BL
41
K_LIN_15
0.35
GR/VI
X328*1V
M_LIN
0.35
BL
X226*1V
X226*1V
X226*1V
K_LIN_15
0.35
GR/VI
K_LIN_15
0.35
GR/VI
K_LIN_15
0.35
GR/VI
6
A60*1B
A60
Electrochromic interior rear view mirror
for auxiliary
2
B156*1B
B156
Rain-light-solar-condensation sensor
2
A21*11B
A21
Roof function centre
Diesel
2
A203*1B
A203
Remote control receiver
B46/B48/B58 engine
N55/S55 engine
B38/N13/N20/N26 engine
A46
Digital Motor Electronics
37
A462*1B
N47/N57 TOP engine
25
A460*1B
B37/B47/N47/N57 engine
A460
Digital diesel electronics
8
E5*1B
E5
Right headlight
8
E86*1B
E86
Left headlight

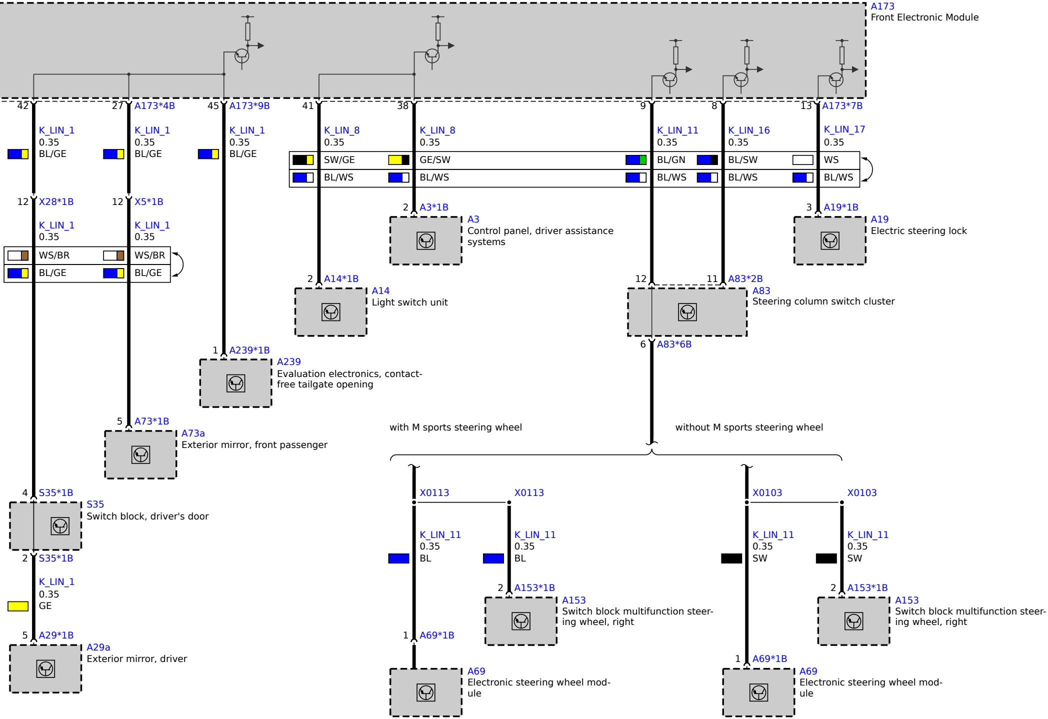
A173
Front Electronic Module
42
27
A173*4B
45
A173*9B
41
38
9
8
13
A173*7B
K_LIN_1
0.35
BL/GE
K_LIN_1
0.35
BL/GE
K_LIN_1
0.35
BL/GE
K_LIN_8
0.35
SW/GE
BL/WS
K_LIN_8
0.35
GE/SW
BL/WS
K_LIN_11
0.35
BL/GN
BL/WS
K_LIN_16
0.35
BL/SW
BL/WS
K_LIN_17
0.35
WS
BL/WS
12
X28*1B
12
X5*1B
K_LIN_1
0.35
WS/BR
BL/GE
K_LIN_1
0.35
WS/BR
BL/GE
2
A3*1B
A3
Control panel, driver assistance systems
3
A19*1B
A19
Electric steering lock
2
A14*1B
A14
Light switch unit
12
11
A83*2B
A83
Steering column switch cluster
6
A83*6B
1
A239*1B
A239
Evaluation electronics, contact-free tailgate opening
5
A73*1B
A73a
Exterior mirror, front passenger
with M sports steering wheel
without M sports steering wheel
4
S35*1B
S35
Switch block, driver's door
2
S35*1B
K_LIN_1
0.35
GE
5
A29*1B
A29a
Exterior mirror, driver
X0113
X0113
K_LIN_11
0.35
BL
K_LIN_11
0.35
BL
2
A153*1B
A153
Switch block multifunction steering wheel, right
1
A69*1B
A69
Electronic steering wheel module
X0103
X0103
K_LIN_11
0.35
SW
K_LIN_11
0.35
SW
2
A153*1B
A153
Switch block multifunction steering wheel, right
1
A69*1B
A69
Electronic steering wheel module

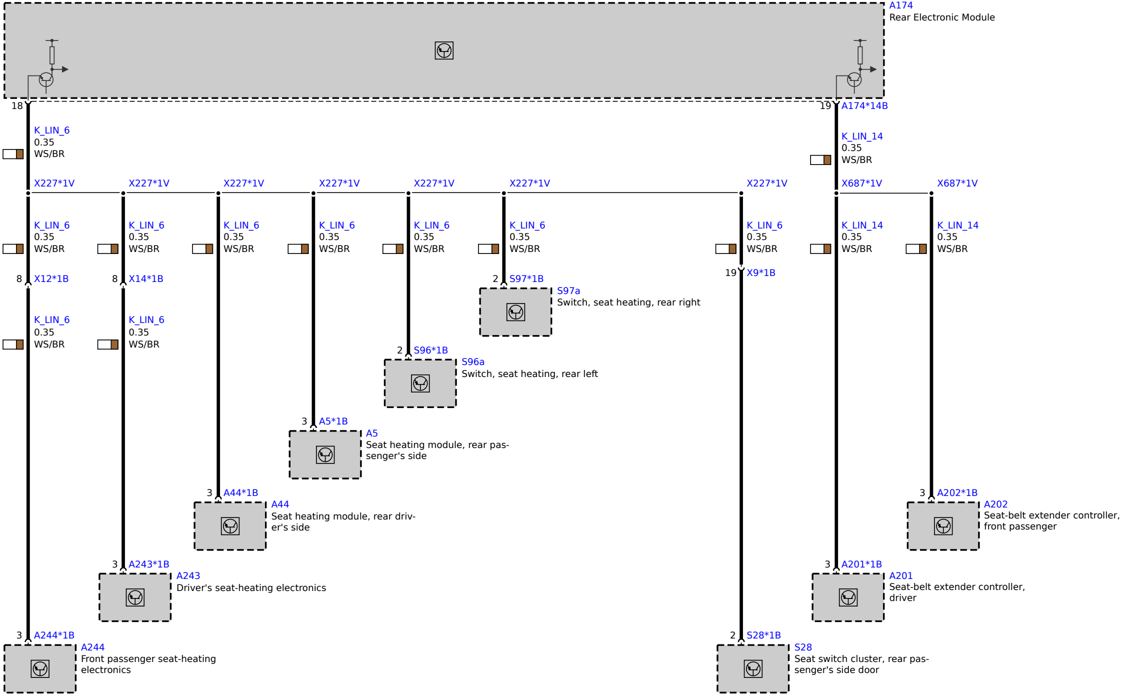
A174
Rear Electronic Module
18
19
A174*14B
K_LIN_6
0.35
WS/BR
K_LIN_14
0.35
WS/BR
X227*1V
X227*1V
X227*1V
X227*1V
X227*1V
X227*1V
X227*1V
X687*1V
X687*1V
K_LIN_6
0.35
WS/BR
K_LIN_6
0.35
WS/BR
K_LIN_6
0.35
WS/BR
K_LIN_6
0.35
WS/BR
K_LIN_6
0.35
WS/BR
K_LIN_6
0.35
WS/BR
K_LIN_6
0.35
WS/BR
K_LIN_14
0.35
WS/BR
K_LIN_14
0.35
WS/BR
8
X12*1B
8
X14*1B
2
S97*1B
19
X9*1B
S97a
Switch, seat heating, rear right
K_LIN_6
0.35
WS/BR
K_LIN_6
0.35
WS/BR
2
S96*1B
S96a
Switch, seat heating, rear left
3
A5*1B
A5
Seat heating module, rear passenger's side
3
A44*1B
A44
Seat heating module, rear driver's side
3
A202*1B
A202
Seat-belt extender controller, front passenger
3
A243*1B
A243
Driver's seat-heating electronics
3
A201*1B
A201
Seat-belt extender controller, driver
3
A244*1B
A244
Front passenger seat-heating electronics
2
S28*1B
S28
Seat switch cluster, rear passenger's side door