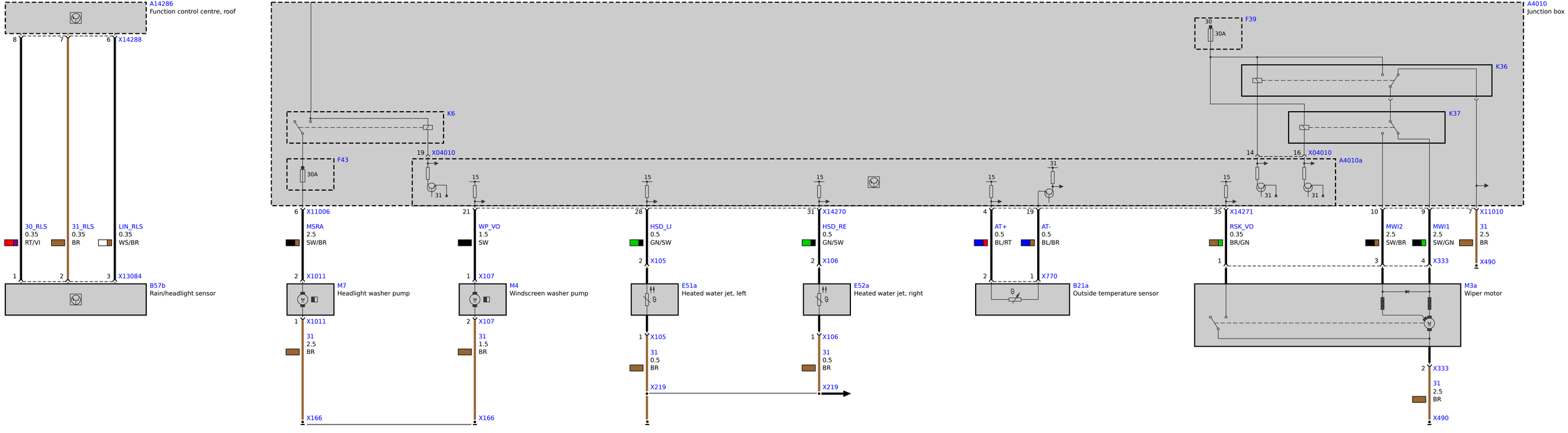
A14286
Function control centre, roof
8
7
6
X14288
30_RLS
0.35
RT/VI
31_RLS
0.35
BR
LIN_RLS
0.35
WS/BR
1
2
3
X13084
B57b
Rain/headlight sensor
A4010
Junction box
30
F39
30A
K36
K37
K6
F43
30A
19
X04010
31
15
14
16
X04010
A4010a
31
6
X11006
MSRA
2.5
SW/BR
21
WP_VO
1.5
SW
28
HSD_LI
0.5
GN/SW
31
X14270
HSD_RE
0.5
GN/SW
4
19
AT+
0.5
BL/RT
AT-
0.5
BL/BR
35
X14271
RSK_VO
0.35
BR/GN
10
9
MWI2
2.5
SW/BR
MWI1
2.5
SW/GN
7
X11010
31
2.5
BR
X490
2
X1011
M7
Headlight washer pump
21
X107
M4
Windscreen washer pump
2
X105
E51a
Heated water jet, left
2
X106
E52a
Heated water jet, right
2
1
X770
B21a
Outside temperature sensor
1
3
4
X333
M3a
Wiper motor
1
X1011
31
2.5
BR
X166
2
X107
31
1.5
BR
X166
1
X105
31
0.5
BR
X219
1
X106
31
0.5
BR
X219
2
X333
31
2.5
BR
X490