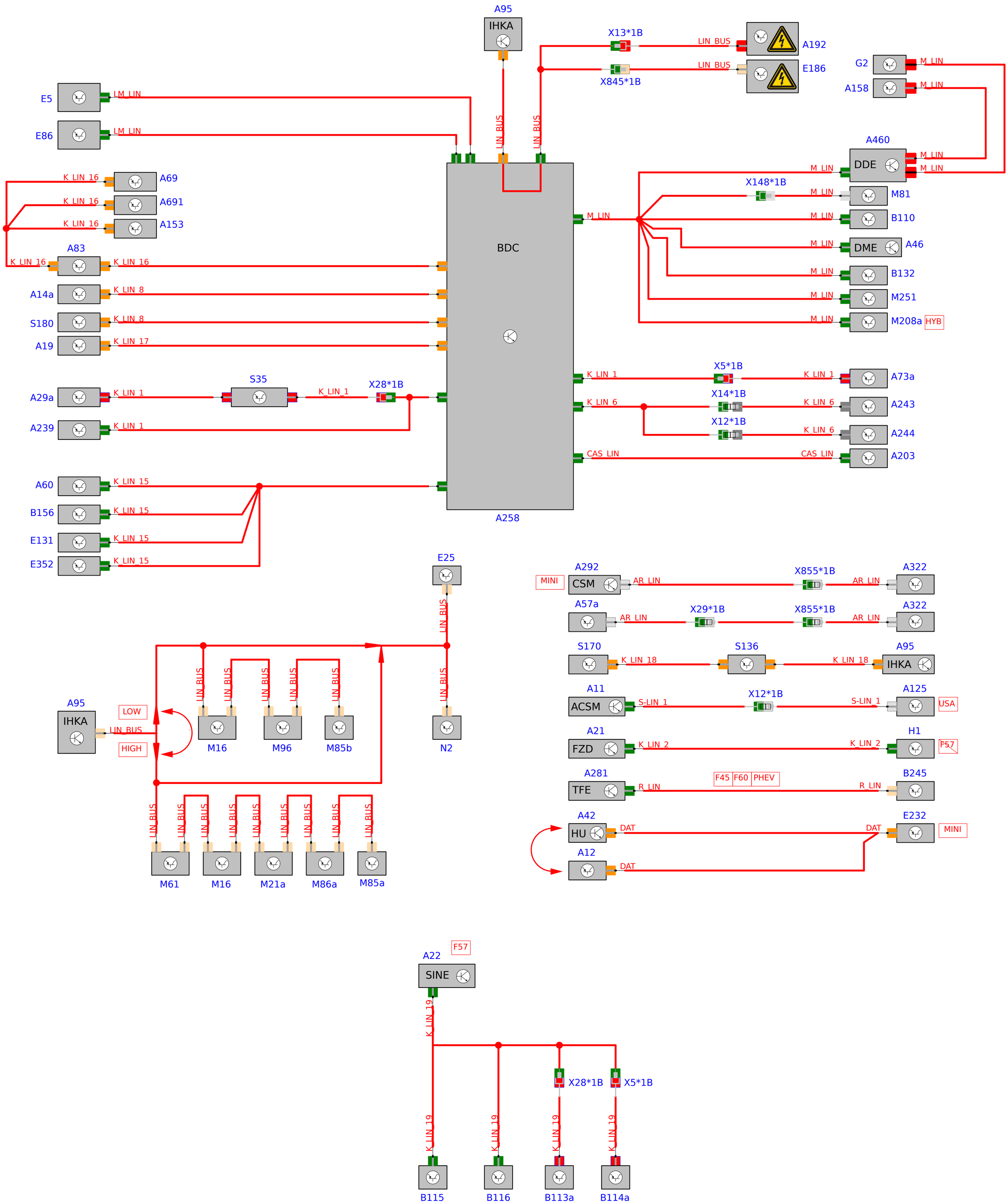
A95
IHKA
X13*1B
LIN_BUS
A192
X845*1B
LIN_BUS
E186
G2
M_LIN
A158
M_LIN
E5
LM_LIN
E86
LM_LIN
LIN_BUS
LIN_BUS
A460
DDE
M_LIN
M_LIN
M_LIN
X148*1B
M_LIN
M81
K_LIN_16
A69
K_LIN_16
A691
K_LIN_16
A153
M_LIN
M_LIN
B110
A83
K_LIN_16
K_LIN_16
BDC
M_LIN
DME
A46
M_LIN
B132
A14a
K_LIN_8
M_LIN
M251
S180
K_LIN_8
M_LIN
M208a
HYB
A19
K_LIN_17
X5*1B
K_LIN_1
K_LIN_1
A73a
S35
X28*1B
A29a
K_LIN_1
K_LIN_1
X14*1B
K_LIN_6
K_LIN_6
A243
A239
K_LIN_1
X12*1B
K_LIN_6
A244
CAS_LIN
CAS_LIN
A203
A60
K_LIN_15
B156
K_LIN_15
E131
K_LIN_15
E352
K_LIN_15
A258
E25
LIN_BUS
A292
MINI
CSM
AR_LIN
X855*1B
AR_LIN
A322
A57a
AR_LIN
X29*1B
X855*1B
AR_LIN
A322
S170
K_LIN_18
S136
K_LIN_18
A95
IHKA
A95
IHKA
LOW
LIN_BUS
HIGH
LIN_BUS
M16
M96
M85b
N2
A11
ACSM
S-LIN_1
X12*1B
S-LIN_1
A125
USA
A21
FZD
K_LIN_2
K_LIN_2
H1
F57
A281
TFE
R_LIN
F45
F60
PHEV
R_LIN
B245
A42
HU
DAT
DAT
E232
MINI
A12
DAT
M61
M16
M21a
M86a
M85a
A22
F57
SINE
K_LIN_19
X28*1B
X5*1B
K_LIN_19
K_LIN_19
K_LIN_19
K_LIN_19
B115
B116
B113a
B114a