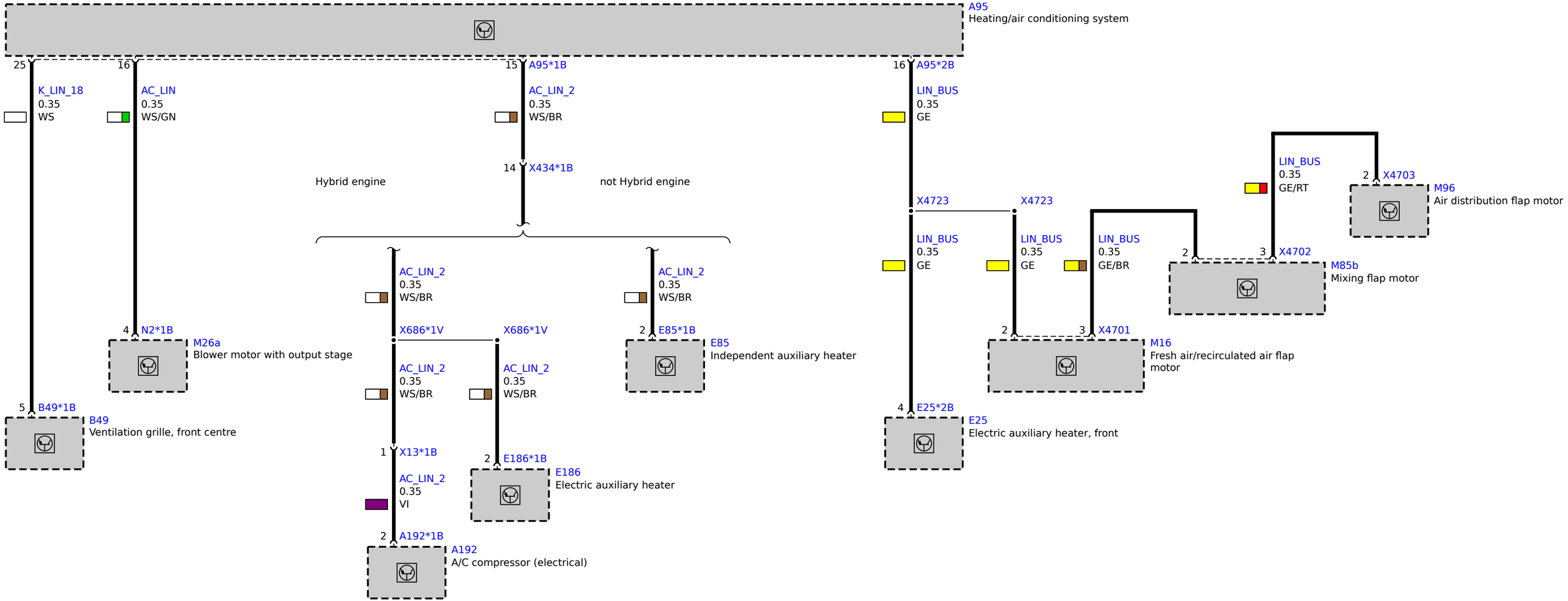
A95
Heating/air conditioning system
25
K_LIN_18
0.35
WS
16
AC_LIN
0.35
WS/GN
15
A95*1B
AC_LIN_2
0.35
WS/BR
14
X434*1B
Hybrid engine
not Hybrid engine
16
A95*2B
LIN_BUS
0.35
GE
X4723
X4723
LIN_BUS
0.35
GE
LIN_BUS
0.35
GE
LIN_BUS
0.35
GE/BR
LIN_BUS
0.35
GE/RT
2
X4703
M96
Air distribution flap motor
2
3
X4702
M85b
Mixing flap motor
AC_LIN_2
0.35
WS/BR
AC_LIN_2
0.35
WS/BR
4
N2*1B
M26a
Blower motor with output stage
X686*1V
X686*1V
2
E85*1B
E85
Independent auxiliary heater
AC_LIN_2
0.35
WS/BR
AC_LIN_2
0.35
WS/BR
2
3
X4701
M16
Fresh air/recirculated air flap motor
5
B49*1B
B49
Ventilation grille, front centre
1
X13*1B
2
E186*1B
E186
Electric auxiliary heater
AC_LIN_2
0.35
VI
2
A192*1B
A192
A/C compressor (electrical)
4
E25*2B
E25
Electric auxiliary heater, front