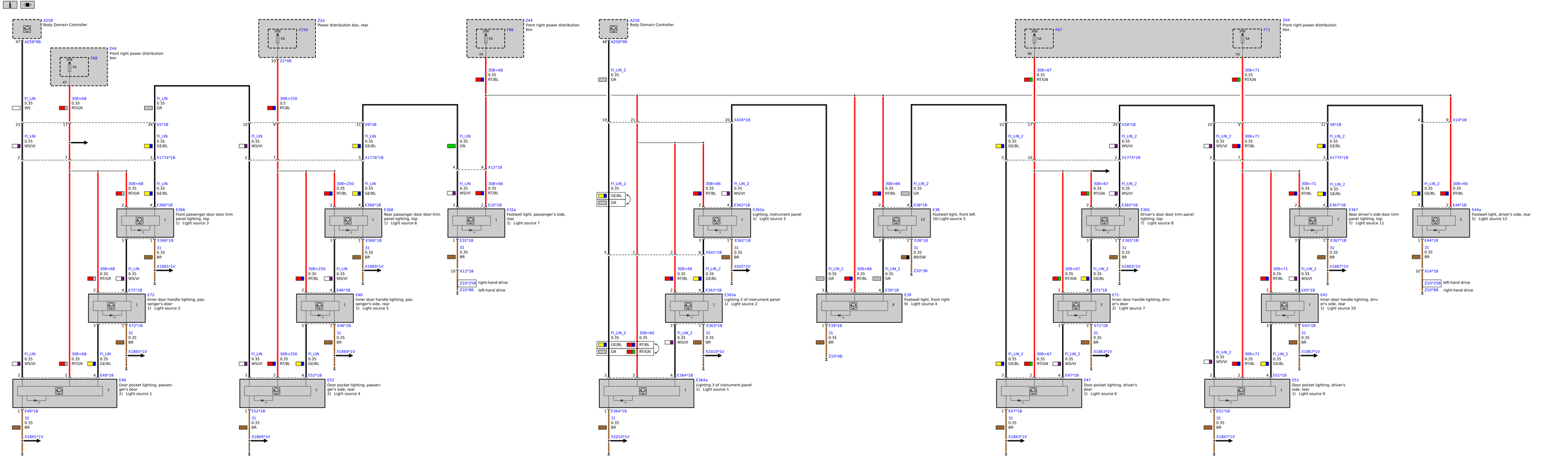
A258
Body Domain Controller
A258*9B
Z44
Front right power distribution box
F68
30A
5A
Z2a
Power distribution box, rear
F250
Z2*4B
F66
F67
F71
Fl_LIN
Fl_LIN_2
30B<68
30B<250
30B<66
30B<67
30B<71
X5*1B
X9*1B
X12*1B
X28*1B
X8*1B
X14*1B
X1774*1B
X1776*1B
X1773*1B
X1775*1B
E366*1B
E366
Front passenger door door trim panel lighting, top
1) Light source 3
E368*1B
E368
Rear passenger door door trim panel lighting, top
1) Light source 6
E32*1B
E32a
Footwell light, passenger's side, rear
1) Light source 7
E365*1B
E365
Driver's door door trim panel lighting, top
7) Light source 8
E367*1B
E367
Rear driver's side door trim panel lighting, top
7) Light source 11
E44*1B
E44a
Footwell light, driver's side, rear
5) Light source 12
E72*1B
E72
Inner door handle lighting, passenger's door
1) Light source 2
E46*1B
E46
Inner door handle lighting, passenger's side, rear
1) Light source 5
E71*1B
E71
Inner door handle lighting, driver's door
2) Light source 7
E45*1B
E45
Inner door handle lighting, driver's side, rear
1) Light source 10
E48*1B
E48
Door pocket lighting, passenger's door
2) Light source 1
E52*1B
E52
Door pocket lighting, passenger's side, rear
2) Light source 4
E47*1B
E47
Door pocket lighting, driver's door
1) Light source 6
E51*1B
E51
Door pocket lighting, driver's side, rear
1) Light source 9
X1865*1V
X1869*1V
X1863*1V
X1867*1V
Z10*25B
Z10*8B
right-hand drive
left-hand drive
Z10*25B
Z10*8B
left-hand drive
right-hand drive
A258*9B
Fl_LIN_2
GE/BL
GR
30B<66
RT/BL
RT/GN
K434*1B
E362*1B
E362a
Lighting, instrument panel
1) Light source 3
X501*1B
X402*1V
E363*1B
E363a
Lighting 2 of instrument panel
1) Light source 2
X201*1V
E364*1B
E364a
Lighting 3 of instrument panel
1) Light source 1
E38*1B
E38
Footwell light, front left
10) Light source 5
Z10*3B
E39*1B
E39
Footwell light, front right
9) Light source 4
Z10*4B