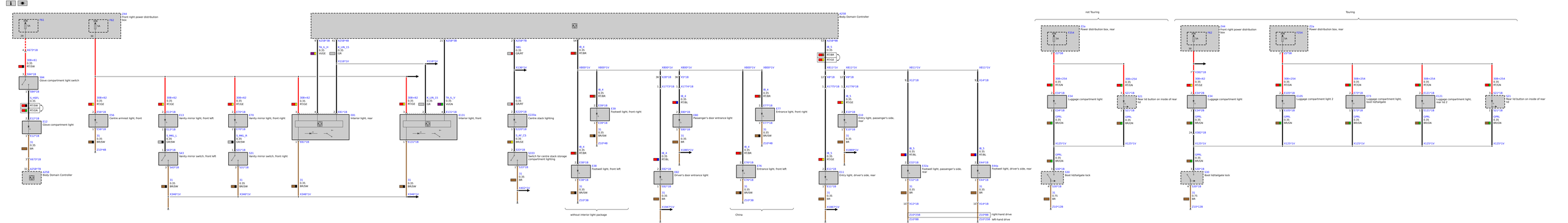
Z44
Front right power distribution box
F61
F62
A250
Body Domain Controller
Glove compartment light switch
E12
Glove compartment light
Centre armrest light, front
Vanity mirror light, front left
Vanity mirror light, front right
Vanity mirror light, rear
Vanity mirror switch, front left
Vanity mirror switch, front right
Interior light, rear
Interior light, front
Footwell light, front right
Footwell light, front left
Driver's door entrance light
Passenger's door entrance light
Entrance light, front right
Entrance light, front left
Centre stack lighting
Switch for centre stack storage compartment lighting
without interior light package
China
Entry light, driver's side, rear
Entry light, passenger's side, rear
Footwell light, passenger's side, rear
Footwell light, driver's side, rear
right-hand drive
left-hand drive
not Touring
Touring
Z22
Power distribution box, rear
Luggage compartment light
Rear lid button on inside of rear lid
Boot lid/tailgate lock
Luggage compartment light 2
Luggage compartment light, boot lid/tailgate
Luggage compartment light, rear lid 2
Rear lid button on inside of rear lid