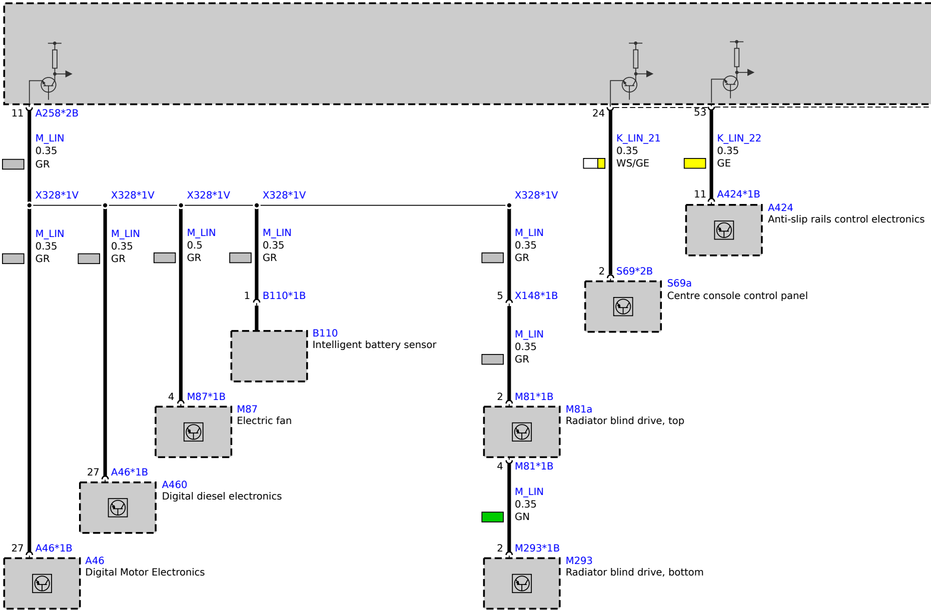
11
A258*2B
M_LIN
0.35
GR
24
K_LIN_21
0.35
WS/GE
53
K_LIN_22
0.35
GE
X328*1V
X328*1V
X328*1V
X328*1V
X328*1V
11
A424*1B
A424
Anti-slip rails control electronics
M_LIN
0.35
GR
M_LIN
0.35
GR
M_LIN
0.5
GR
M_LIN
0.35
GR
M_LIN
0.35
GR
2
S69*2B
S69a
Centre console control panel
1
B110*1B
5
X148*1B
B110
Intelligent battery sensor
M_LIN
0.35
GR
4
M87*1B
M87
Electric fan
2
M81*1B
M81a
Radiator blind drive, top
4
M81*1B
27
A46*1B
A460
Digital diesel electronics
M_LIN
0.35
GN
27
A46*1B
A46
Digital Motor Electronics
2
M293*1B
M293
Radiator blind drive, bottom

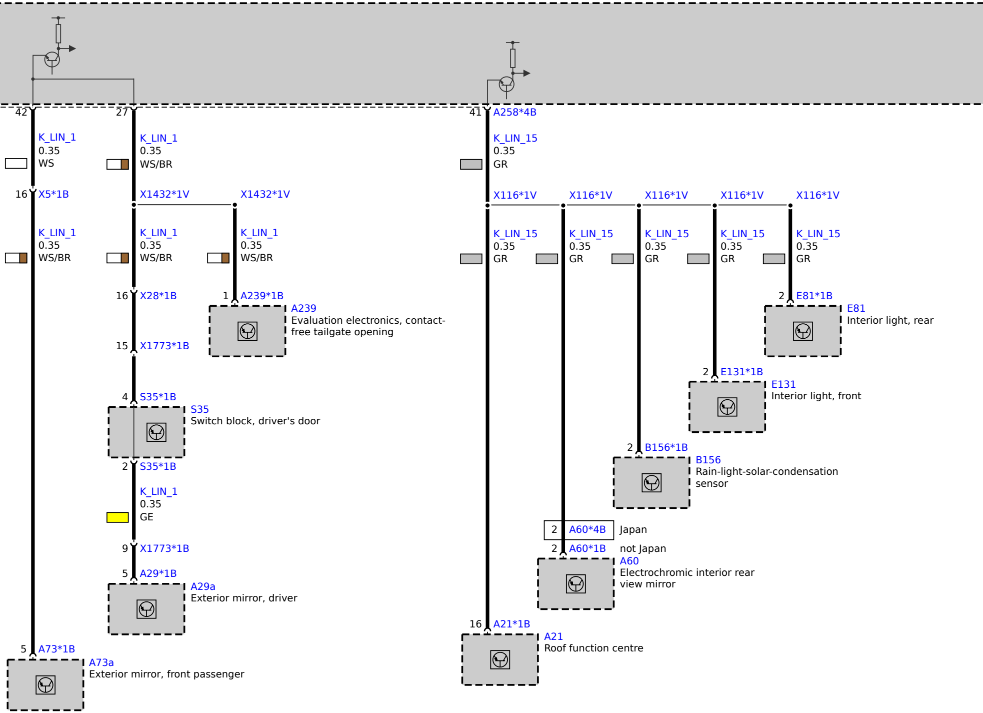
42
27
41
A258*4B
K_LIN_1
0.35
WS
K_LIN_1
0.35
WS/BR
K_LIN_15
0.35
GR
16
X5*1B
X1432*1V
X1432*1V
X116*1V
X116*1V
X116*1V
X116*1V
X116*1V
K_LIN_1
0.35
WS/BR
K_LIN_1
0.35
WS/BR
K_LIN_1
0.35
WS/BR
K_LIN_15
0.35
GR
K_LIN_15
0.35
GR
K_LIN_15
0.35
GR
K_LIN_15
0.35
GR
K_LIN_15
0.35
GR
16
X28*1B
1
A239*1B
A239
Evaluation electronics, contact-free tailgate opening
2
E81*1B
E81
Interior light, rear
15
X1773*1B
2
E131*1B
E131
Interior light, front
4
S35*1B
S35
Switch block, driver's door
2
B156*1B
B156
Rain-light-solar-condensation sensor
2
S35*1B
K_LIN_1
0.35
GE
2
A60*4B
Japan
2
A60*1B
not Japan
A60
Electrochromic interior rear view mirror
9
X1773*1B
5
A29*1B
A29a
Exterior mirror, driver
16
A21*1B
A21
Roof function centre
5
A73*1B
A73a
Exterior mirror, front passenger

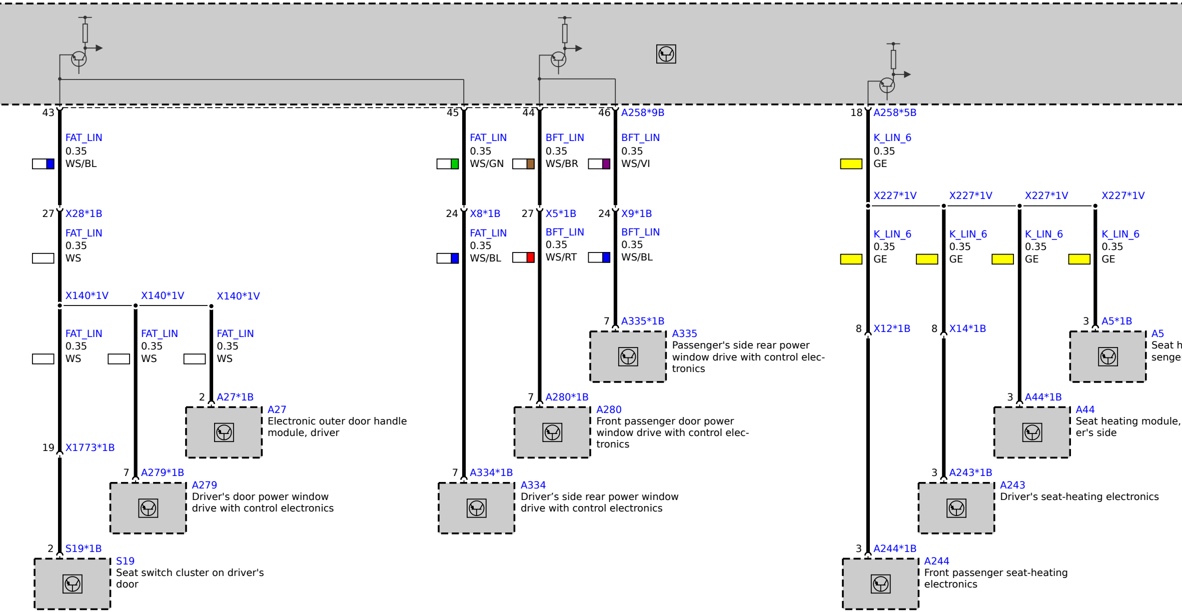
43
45
44
46
A258*9B
18
A258*5B
FAT_LIN
0.35
WS/BL
FAT_LIN
0.35
WS/GN
BFT_LIN
0.35
WS/BR
BFT_LIN
0.35
WS/VI
K_LIN_6
0.35
GE
X227*1V
X227*1V
X227*1V
X227*1V
27
X28*1B
24
X8*1B
27
X5*1B
24
X9*1B
FAT_LIN
0.35
WS
FAT_LIN
0.35
WS/BL
BFT_LIN
0.35
WS/RT
BFT_LIN
0.35
WS/BL
K_LIN_6
0.35
GE
K_LIN_6
0.35
GE
K_LIN_6
0.35
GE
K_LIN_6
0.35
GE
X140*1V
X140*1V
X140*1V
7
A335*1B
A335
Passenger's side rear power window drive with control electronics
8
X12*1B
8
X14*1B
3
A5*1B
A5
Seat h
senge
FAT_LIN
0.35
WS
FAT_LIN
0.35
WS
FAT_LIN
0.35
WS
2
A27*1B
A27
Electronic outer door handle module, driver
7
A280*1B
A280
Front passenger door power window drive with control electronics
3
A44*1B
A44
Seat heating module,
er's side
19
X1773*1B
7
A279*1B
A279
Driver's door power window drive with control electronics
7
A334*1B
A334
Driver’s side rear power window drive with control electronics
3
A243*1B
A243
Driver's seat-heating electronics
2
S19*1B
S19
Seat switch cluster on driver's door
3
A244*1B
A244
Front passenger seat-heating electronics

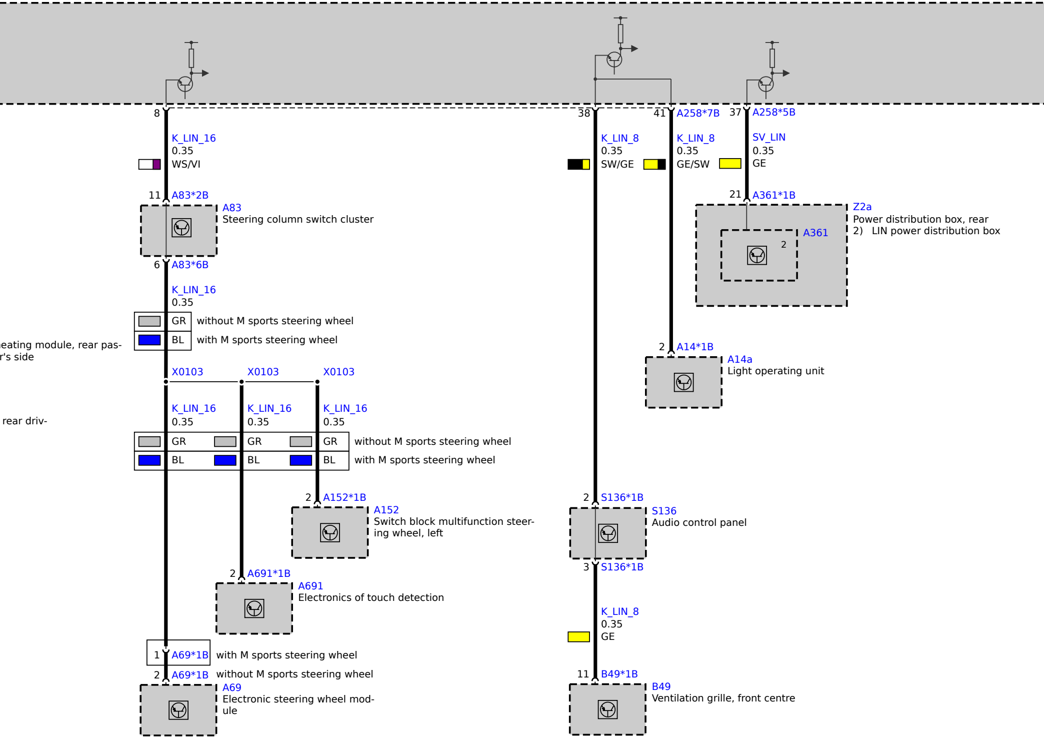
8
K_LIN_16
0.35
WS/VI
11 A83*2B
A83
Steering column switch cluster
6 A83*6B
K_LIN_16
0.35
GR without M sports steering wheel
BL with M sports steering wheel
eating module, rear pas-
r's side
rear driv-
X0103
X0103
X0103
K_LIN_16
0.35
K_LIN_16
0.35
K_LIN_16
0.35
GR GR GR without M sports steering wheel
BL BL BL with M sports steering wheel
2 A152*1B
A152
Switch block multifunction steering wheel, left
2 A691*1B
A691
Electronics of touch detection
1 A69*1B with M sports steering wheel
2 A69*1B without M sports steering wheel
A69
Electronic steering wheel module
38
41 A258*7B
37 A258*5B
K_LIN_8
0.35
SW/GE
K_LIN_8
0.35
GE/SW
SV_LIN
0.35
GE
21 A361*1B
Z2a
Power distribution box, rear
2) LIN power distribution box
A361
2
2 A14*1B
A14a
Light operating unit
2 S136*1B
S136
Audio control panel
3 S136*1B
K_LIN_8
0.35
GE
11 B49*1B
B49
Ventilation grille, front centre

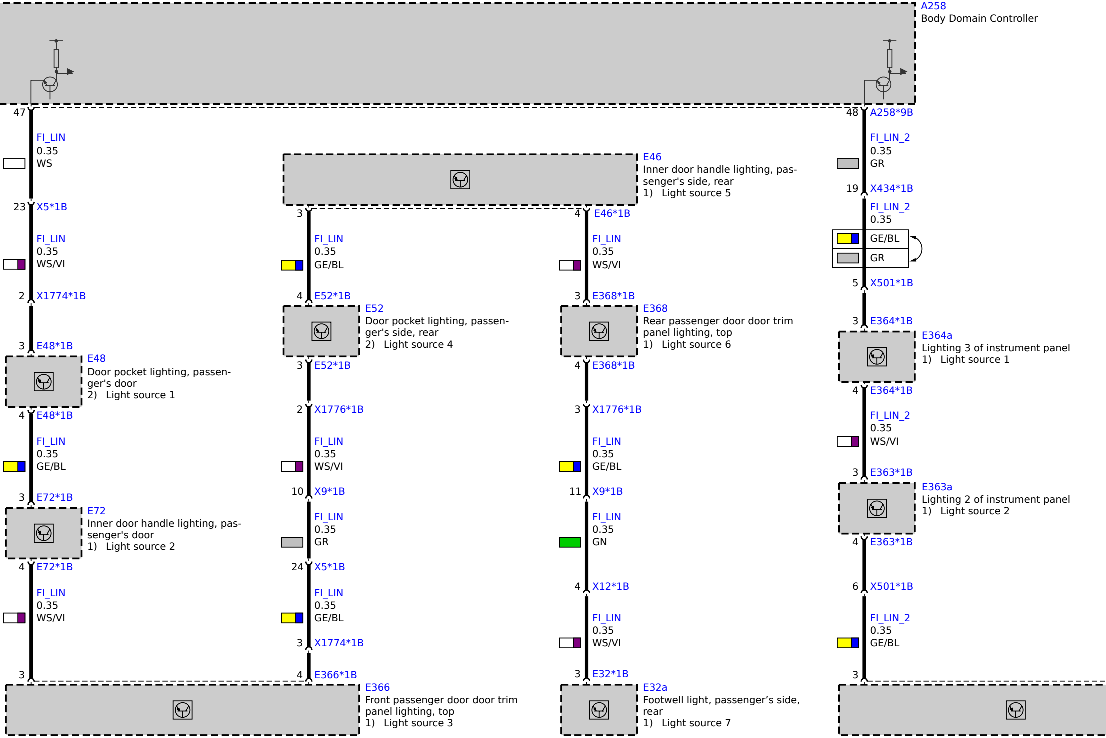
A258
Body Domain Controller
47
48
A258*9B
FI_LIN
0.35
WS
23
X5*1B
FI_LIN
0.35
WS/VI
2
X1774*1B
3
E48*1B
E48
Door pocket lighting, passenger's door
2) Light source 1
4
E48*1B
FI_LIN
0.35
GE/BL
3
E72*1B
E72
Inner door handle lighting, passenger's door
1) Light source 2
4
E72*1B
FI_LIN
0.35
WS/VI
3
E46
Inner door handle lighting, passenger's side, rear
1) Light source 5
3
4
E46*1B
FI_LIN
0.35
GE/BL
4
E52*1B
E52
Door pocket lighting, passenger's side, rear
2) Light source 4
3
E52*1B
2
X1776*1B
FI_LIN
0.35
WS/VI
10
X9*1B
FI_LIN
0.35
GR
24
X5*1B
FI_LIN
0.35
GE/BL
3
X1774*1B
4
E366*1B
E366
Front passenger door door trim panel lighting, top
1) Light source 3
FI_LIN
0.35
WS/VI
3
E368*1B
E368
Rear passenger door door trim panel lighting, top
1) Light source 6
4
E368*1B
3
X1776*1B
FI_LIN
0.35
GE/BL
11
X9*1B
FI_LIN
0.35
GN
4
X12*1B
FI_LIN
0.35
WS/VI
3
E32*1B
E32a
Footwell light, passenger’s side, rear
1) Light source 7
FI_LIN_2
0.35
GR
19
X434*1B
FI_LIN_2
0.35
GE/BL
GR
5
X501*1B
3
E364*1B
E364a
Lighting 3 of instrument panel
1) Light source 1
4
E364*1B
FI_LIN_2
0.35
WS/VI
3
E363*1B
E363a
Lighting 2 of instrument panel
1) Light source 2
4
E363*1B
6
X501*1B
FI_LIN_2
0.35
GE/BL
3

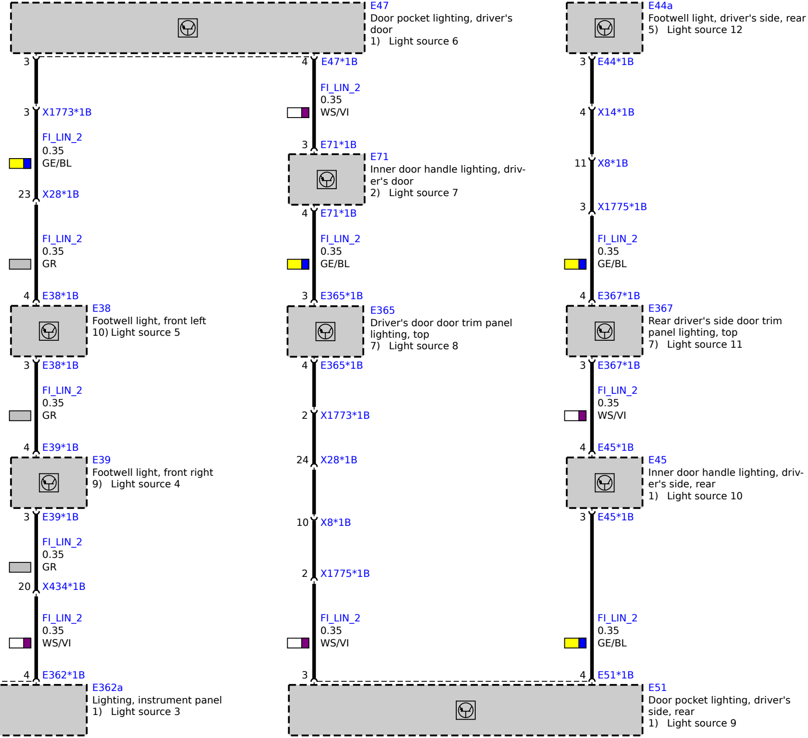
E47
Door pocket lighting, driver's door
1) Light source 6
3
4
E47*1B
FI_LIN_2
0.35
WS/VI
3
X1773*1B
FI_LIN_2
0.35
GE/BL
23
X28*1B
FI_LIN_2
0.35
GR
4
E38*1B
E38
Footwell light, front left
10) Light source 5
3
E38*1B
FI_LIN_2
0.35
GR
4
E39*1B
E39
Footwell light, front right
9) Light source 4
3
E39*1B
FI_LIN_2
0.35
GR
20
X434*1B
FI_LIN_2
0.35
WS/VI
4
E362*1B
E362a
Lighting, instrument panel
1) Light source 3
3
E71*1B
E71
Inner door handle lighting, driver's door
2) Light source 7
4
E71*1B
FI_LIN_2
0.35
GE/BL
3
E365*1B
E365
Driver's door door trim panel lighting, top
7) Light source 8
4
E365*1B
2
X1773*1B
24
X28*1B
10
X8*1B
2
X1775*1B
FI_LIN_2
0.35
WS/VI
3
E44a
Footwell light, driver's side, rear
5) Light source 12
3
E44*1B
4
X14*1B
11
X8*1B
3
X1775*1B
FI_LIN_2
0.35
GE/BL
4
E367*1B
E367
Rear driver's side door trim panel lighting, top
7) Light source 11
3
E367*1B
FI_LIN_2
0.35
WS/VI
4
E45*1B
E45
Inner door handle lighting, driver's side, rear
1) Light source 10
3
E45*1B
FI_LIN_2
0.35
GE/BL
4
E51*1B
E51
Door pocket lighting, driver's side, rear
1) Light source 9