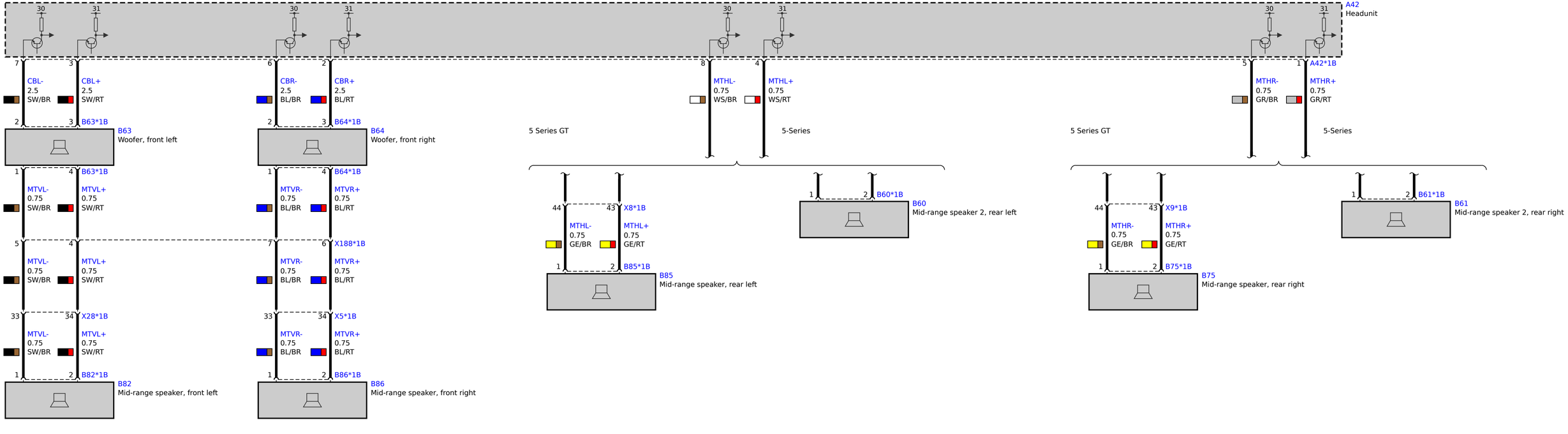
A42
Headunit
30
31
7
3
CBL-
2.5
SW/BR
CBL+
2.5
SW/RT
2
3
B63*1B
B63
Woofer, front left
6
2
CBR-
2.5
BL/BR
CBR+
2.5
BL/RT
2
3
B64*1B
B64
Woofer, front right
8
4
MTHL-
0.75
WS/BR
MTHL+
0.75
WS/RT
5 Series GT
5-Series
5
1
A42*1B
MTHR-
0.75
GR/BR
MTHR+
0.75
GR/RT
5 Series GT
5-Series
1
4
B63*1B
MTVL-
0.75
SW/BR
MTVL+
0.75
SW/RT
1
4
B64*1B
MTVR-
0.75
BL/BR
MTVR+
0.75
BL/RT
44
43
X8*1B
MTHL-
0.75
GE/BR
MTHL+
0.75
GE/RT
1
2
B85*1B
B85
Mid-range speaker, rear left
1
2
B60*1B
B60
Mid-range speaker 2, rear left
44
43
X9*1B
MTHR-
0.75
GE/BR
MTHR+
0.75
GE/RT
1
2
B75*1B
B75
Mid-range speaker, rear right
1
2
B61*1B
B61
Mid-range speaker 2, rear right
5
4
MTVL-
0.75
SW/BR
MTVL+
0.75
SW/RT
7
6
X188*1B
MTVR-
0.75
BL/BR
MTVR+
0.75
BL/RT
33
34
X28*1B
MTVL-
0.75
SW/BR
MTVL+
0.75
SW/RT
33
34
X5*1B
MTVR-
0.75
BL/BR
MTVR+
0.75
BL/RT
1
2
B82*1B
B82
Mid-range speaker, front left
1
2
B86*1B
B86
Mid-range speaker, front right