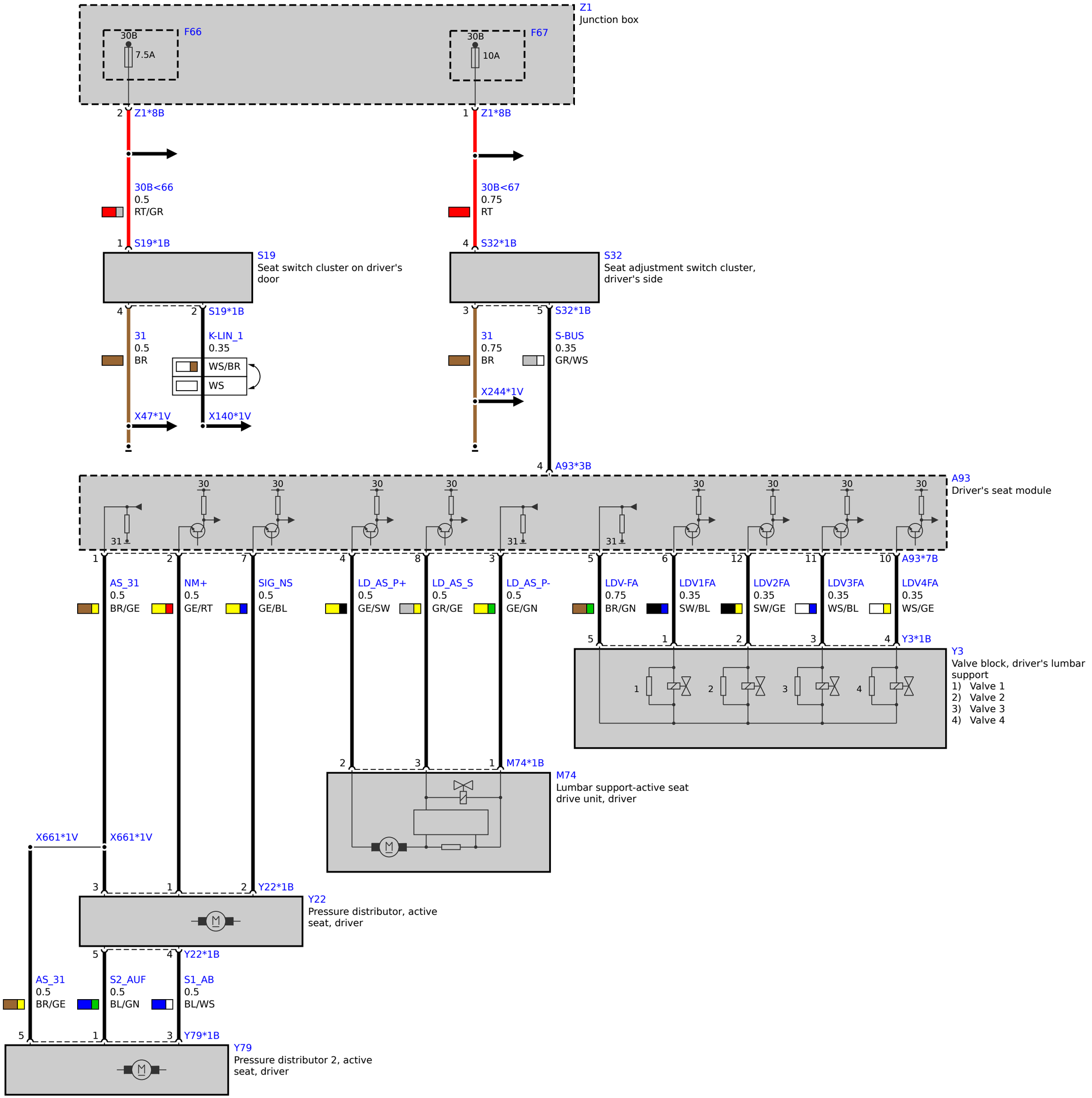
Z1
Junction box
F66
30B
7.5A
F67
30B
10A
2 Z1*8B
1 Z1*8B
30B<66
0.5
RT/GR
30B<67
0.75
RT
1 S19*1B
4 S32*1B
S19
Seat switch cluster on driver's door
S32
Seat adjustment switch cluster, driver's side
4
2 S19*1B
3
5 S32*1B
31
0.5
BR
K-LIN_1
0.35
WS/BR
WS
31
0.75
BR
S-BUS
0.35
GR/WS
X244*1V
X47*1V
X140*1V
4 A93*3B
A93
Driver's seat module
30
31
1
2
7
4
8
3
5
6
12
11
10
A93*7B
AS_31
0.5
BR/GE
NM+
0.5
GE/RT
SIG_NS
0.5
GE/BL
LD_AS_P+
0.5
GE/SW
LD_AS_S
0.5
GR/GE
LD_AS_P-
0.5
GE/GN
LDV-FA
0.75
BR/GN
LDV1FA
0.35
SW/BL
LDV2FA
0.35
SW/GE
LDV3FA
0.35
WS/BL
LDV4FA
0.35
WS/GE
5
1
2
3
4
Y3*1B
Y3
Valve block, driver's lumbar support
1) Valve 1
2) Valve 2
3) Valve 3
4) Valve 4
2
3
1
M74*1B
M74
Lumbar support-active seat drive unit, driver
X661*1V
X661*1V
3
1
2
Y22*1B
Y22
Pressure distributor, active seat, driver
5
4
Y22*1B
AS_31
0.5
BR/GE
S2_AUF
0.5
BL/GN
S1_AB
0.5
BL/WS
5
1
3
Y79*1B
Y79
Pressure distributor 2, active seat, driver