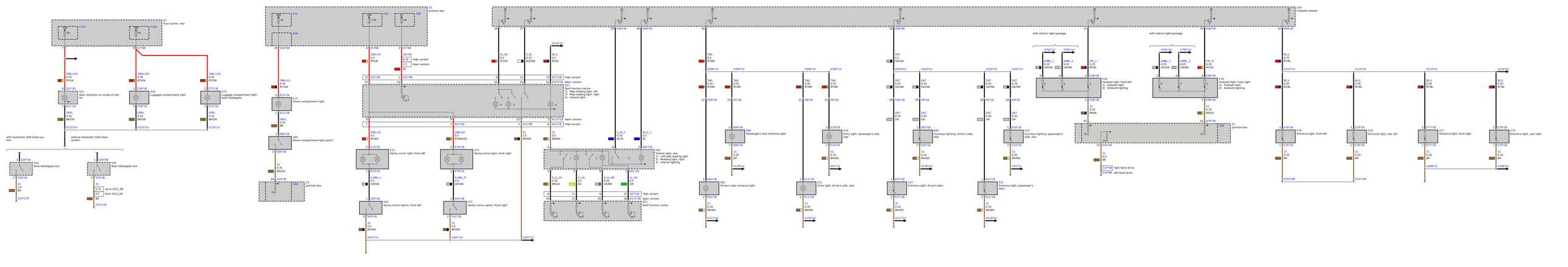
Z2 Fuse carrier, rear
F153 15A
F154 5A
F298
S21 Rear lid button on inside of rear lid
E34 Luggage compartment light
E73 Luggage compartment light, boot lid/tailgate
with Automatic Soft Close system
without Automatic Soft Close system
S30 Boot lid/tailgate lock
up to 2011_08
from 2011_09
Z10*17B
Z1 Junction box
F32 15A
A34
F12 Glove compartment light
F13 Glove compartment light switch
F58 5A
F59 10A
E13 Vanity mirror light, front left
E70 Vanity mirror light, front right
S43 Vanity mirror switch, front left
S31 Vanity mirror switch, front right
High variant
Basic version
Roof function centre
1) Map reading light, left
2) Map reading light, right
3) Interior light
A21 Roof function centre
E81 Interior light, rear
1) Left-side reading light
2) Reading light, right
3) Interior lighting
Z1 Junction box
A58 Footwell module
with interior light package
E58 Footwell light, front left
1) Footwell light
4) Ambient lighting
E59 Footwell light, front right
Z2 Junction box
right-hand drive
left-hand drive
E76 Entrance light, front left
E78 Entrance light, rear left
E77 Entrance light, front right
E79 Entrance light, rear right
E80 Passenger's door entrance light
E82 Driver's door entrance light
E10 Entry light, passenger's side, rear
E11 Entry light, driver's side, rear
E37 Entrance light, driver's door
E14 Courtesy lighting, passenger's side, rear
E15 Courtesy lighting, driver's side, rear
E21 Entrance light, passenger's door