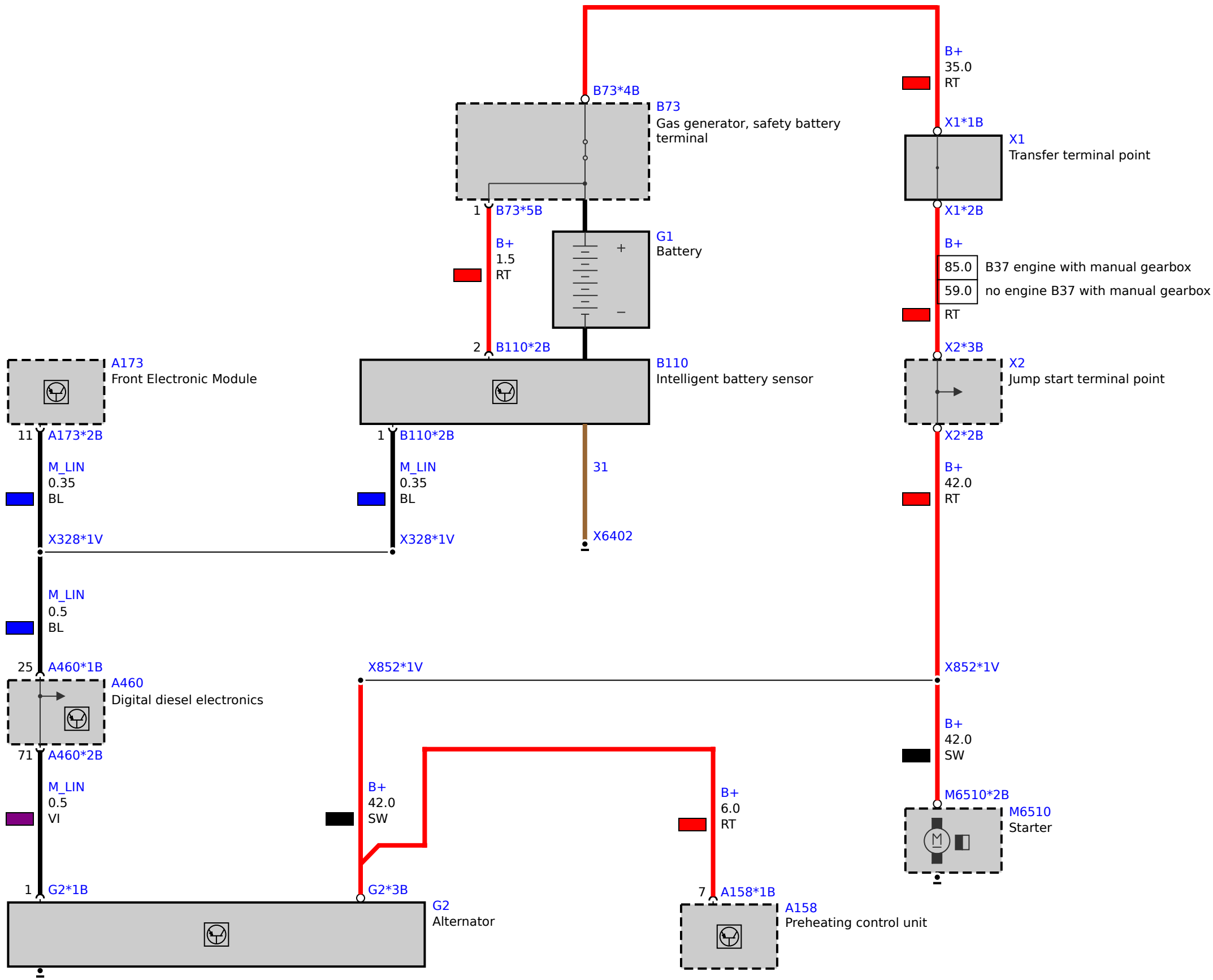
B73*4B
B73
Gas generator, safety battery terminal
B+
35.0
RT
X1*1B
X1
Transfer terminal point
X1*2B
1
B73*5B
B+
1.5
RT
G1
Battery
B+
85.0
B37 engine with manual gearbox
59.0
no engine B37 with manual gearbox
RT
2
B110*2B
X2*3B
A173
Front Electronic Module
B110
Intelligent battery sensor
X2
Jump start terminal point
11
A173*2B
1
B110*2B
X2*2B
M_LIN
0.35
BL
M_LIN
0.35
BL
31
B+
42.0
RT
X328*1V
X328*1V
X6402
M_LIN
0.5
BL
25
A460*1B
X852*1V
X852*1V
A460
Digital diesel electronics
B+
42.0
SW
71
A460*2B
M_LIN
0.5
VI
B+
42.0
SW
B+
6.0
RT
M6510*2B
M6510
Starter
1
G2*1B
G2*3B
G2
Alternator
7
A158*1B
A158
Preheating control unit