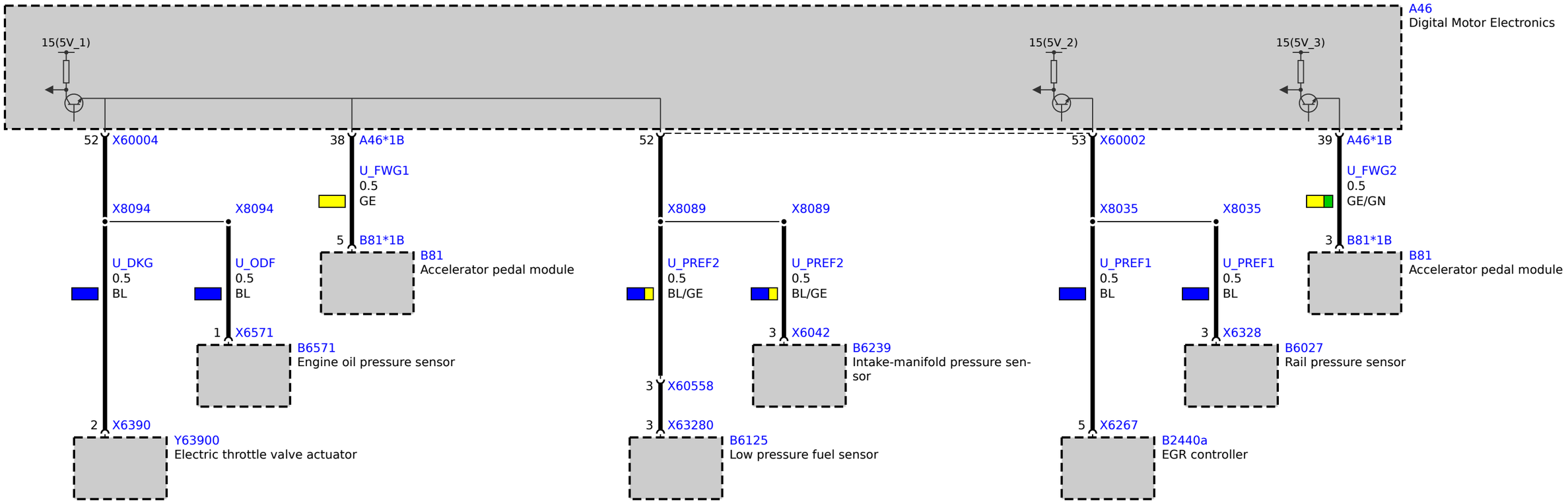
A46
Digital Motor Electronics
15(5V_1)
15(5V_2)
15(5V_3)
52
X60004
38
A46*1B
52
53
X60002
39
A46*1B
U_FWG1
0.5
GE
U_FWG2
0.5
GE/GN
X8094
X8094
X8089
X8089
X8035
X8035
5
B81*1B
3
B81*1B
B81
Accelerator pedal module
B81
Accelerator pedal module
U_DKG
0.5
BL
U_ODF
0.5
BL
U_PREF2
0.5
BL/GE
U_PREF2
0.5
BL/GE
U_PREF1
0.5
BL
U_PREF1
0.5
BL
1
X6571
3
X6042
3
X6328
B6571
Engine oil pressure sensor
B6239
Intake-manifold pressure sen-
sor
B6027
Rail pressure sensor
3
X60558
2
X6390
3
X63280
5
X6267
Y63900
Electric throttle valve actuator
B6125
Low pressure fuel sensor
B2440a
EGR controller