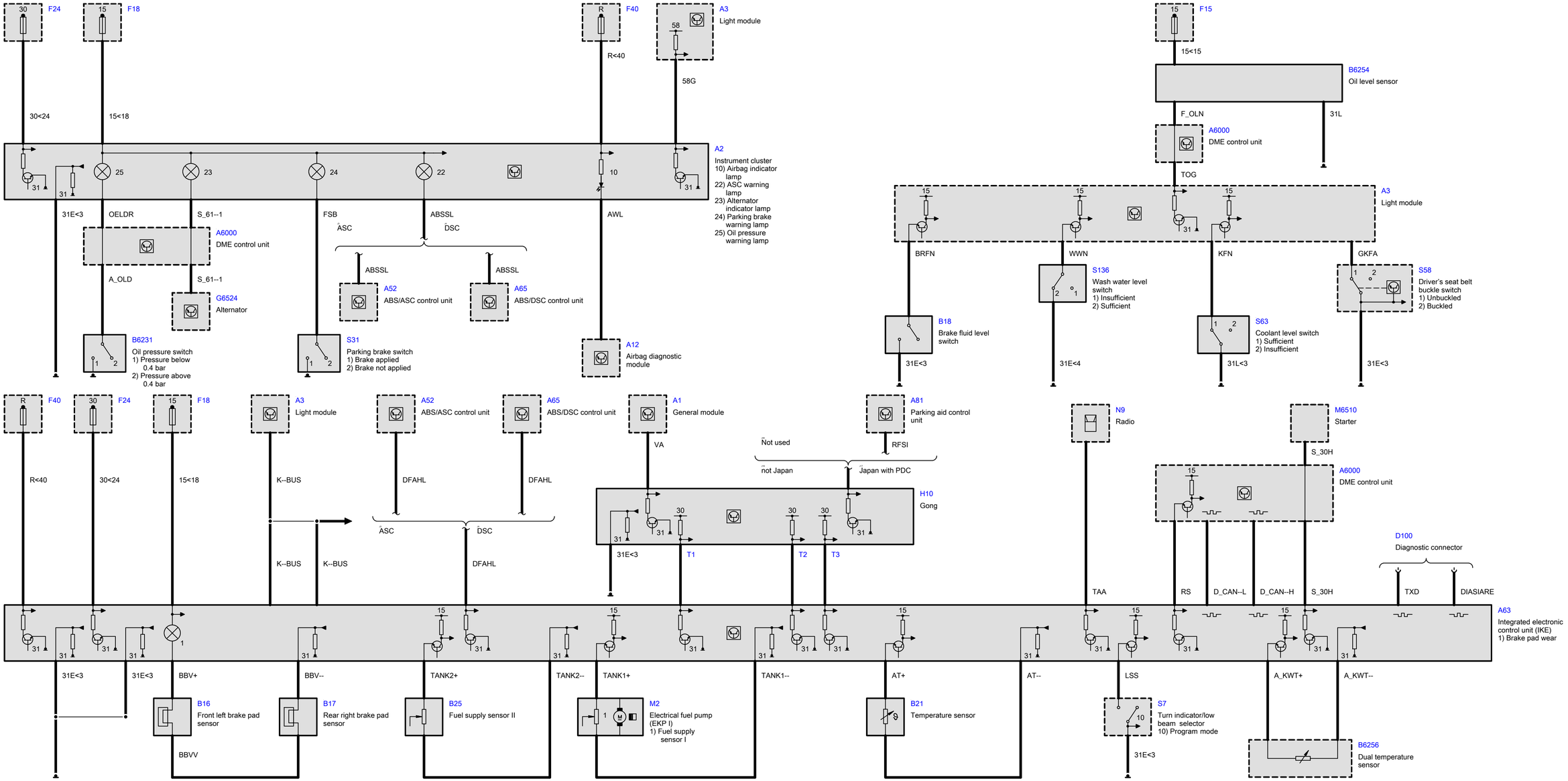
F24
F18
F40
A3
Light module
R<40
58G
30<24
15<18
A2
Instrument cluster
10) Airbag indicator lamp
22) ASC warning lamp
23) Alternator indicator lamp
24) Parking brake warning lamp
25) Oil pressure warning lamp
31E<3
OELDR
S_61--1
FSB
ASC
ABSSL
DSC
AWL
A6000
DME control unit
A_OLD
G6524
Alternator
A52
ABS/ASC control unit
A65
ABS/DSC control unit
B6231
Oil pressure switch
1) Pressure below 0.4 bar
2) Pressure above 0.4 bar
S31
Parking brake switch
1) Brake applied
2) Brake not applied
A12
Airbag diagnostic module
F15
15<15
B6254
Oil level sensor
F_OLN
31L
TOG
BRFN
WWN
KFN
GKFA
B18
Brake fluid level switch
31E<3
S136
Wash water level switch
1) Insufficient
2) Sufficient
31E<4
S63
Coolant level switch
1) Sufficient
2) Insufficient
31L<3
S58
Driver's seat belt buckle switch
1) Unbuckled
2) Buckled
K--BUS
DFAHL
A1
General module
VA
Not used
not Japan
Japan with PDC
A81
Parking aid control unit
RFSI
H10
Gong
T1
T2
T3
N9
Radio
M6510
Starter
S_30H
D100
Diagnostic connector
TAA
RS
D_CAN--L
D_CAN--H
TXD
DIASIARE
A63
Integrated electronic control unit (IKE)
1) Brake pad wear
BBV+
BBV--
TANK2+
TANK2--
TANK1+
TANK1--
AT+
AT--
LSS
A_KWT+
A_KWT--
B16
Front left brake pad sensor
BBVV
B17
Rear right brake pad sensor
B25
Fuel supply sensor II
M2
Electrical fuel pump (EKP I)
1) Fuel supply sensor I
B21
Temperature sensor
S7
Turn indicator/low beam selector
10) Program mode
B6256
Dual temperature sensor