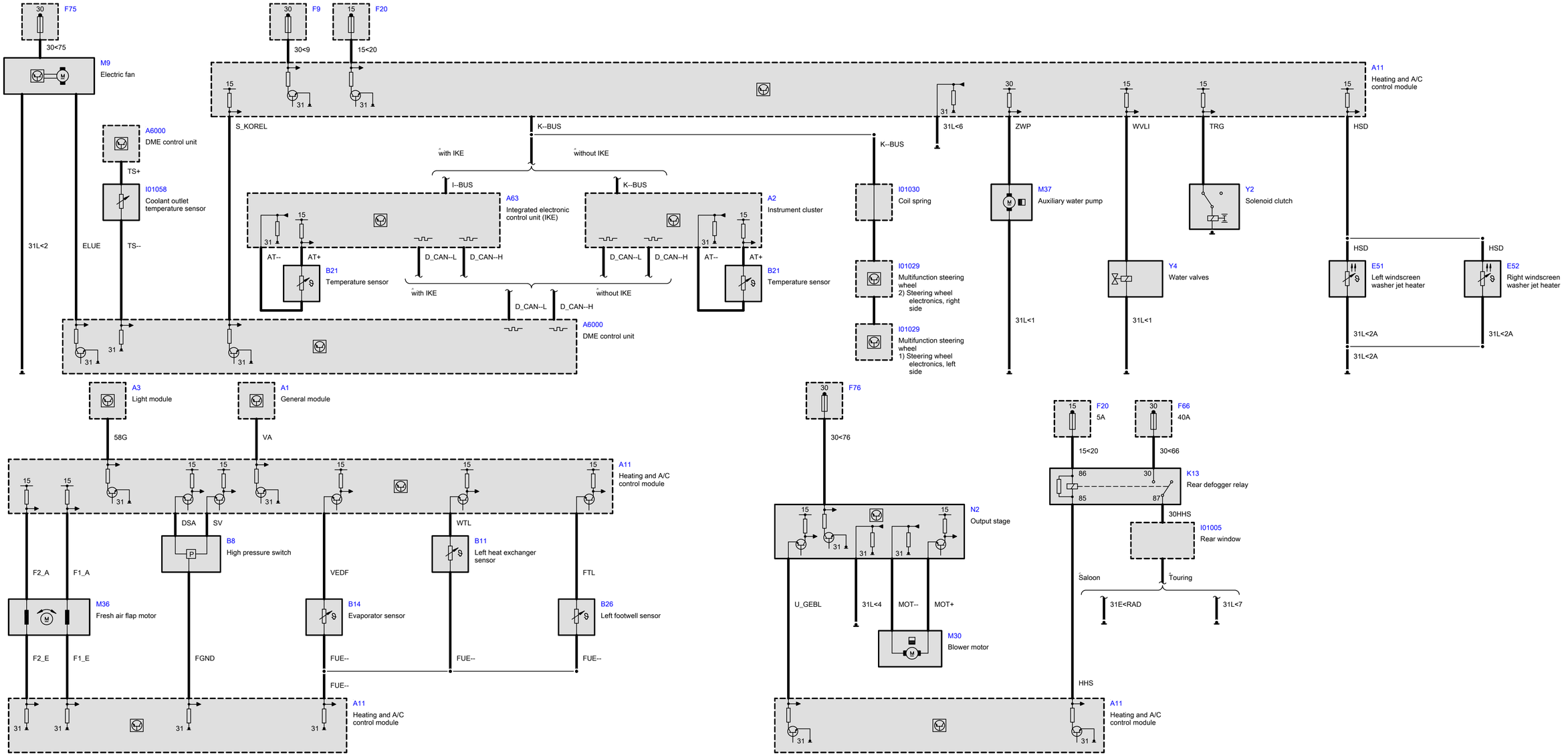
F75
30<75
M9
Electric fan
F9
30<9
F20
15<20
A11
Heating and A/C control module
S_KOREL
K--BUS
31L<6
ZWP
WVLI
TRG
HSD
A6000
DME control unit
TS+
I01058
Coolant outlet temperature sensor
31L<2
ELUE
TS--
with IKE
without IKE
I--BUS
K--BUS
A63
Integrated electronic control unit (IKE)
A2
Instrument cluster
AT--
AT+
B21
Temperature sensor
D_CAN--L
D_CAN--H
I01030
Coil spring
I01029
Multifunction steering wheel
2) Steering wheel electronics, right side
1) Steering wheel electronics, left side
M37
Auxiliary water pump
31L<1
Y2
Solenoid clutch
Y4
Water valves
E51
Left windscreen washer jet heater
E52
Right windscreen washer jet heater
31L<2A
A3
Light module
A1
General module
58G
VA
DSA
SV
WTL
B8
High pressure switch
B11
Left heat exchanger sensor
F2_A
F1_A
VEDF
FTL
M36
Fresh air flap motor
B14
Evaporator sensor
B26
Left footwell sensor
F2_E
F1_E
FGND
FUE--
F76
30<76
N2
Output stage
U_GEBL
31L<4
MOT--
MOT+
M30
Blower motor
F20
5A
F66
40A
15<20
30<66
K13
Rear defogger relay
30HHS
I01005
Rear window
Saloon
Touring
31E<RAD
31L<7
HHS