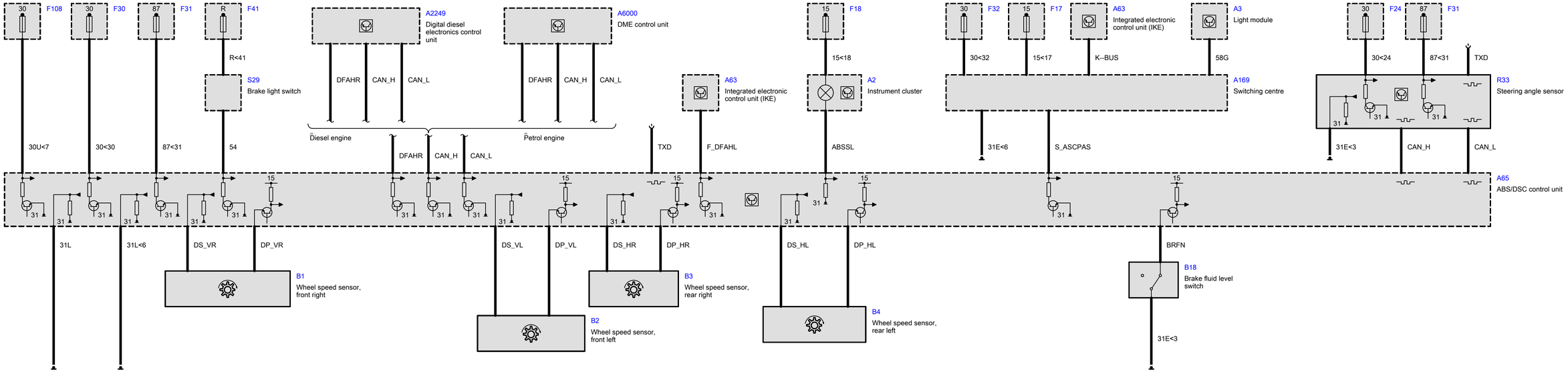
30
F108
30
F30
87
F31
R
F41
R<41
S29
Brake light switch
A2249
Digital diesel electronics control unit
A6000
DME control unit
DFAHR
CAN_H
CAN_L
Diesel engine
Petrol engine
A63
Integrated electronic control unit (IKE)
15
F18
15<18
A2
Instrument cluster
30
F32
15
F17
A63
Integrated electronic control unit (IKE)
A3
Light module
30<32
15<17
K--BUS
58G
A169
Switching centre
30
F24
87
F31
30<24
87<31
TXD
R33
Steering angle sensor
30U<7
30<30
87<31
54
TXD
F_DFAHL
ABSSL
31E<6
S_ASCPAS
31E<3
A65
ABS/DSC control unit
31
15
31L
31L<6
DS_VR
DP_VR
DS_VL
DP_VL
DS_HR
DP_HR
DS_HL
DP_HL
BRFN
B1
Wheel speed sensor, front right
B2
Wheel speed sensor, front left
B3
Wheel speed sensor, rear right
B4
Wheel speed sensor, rear left
B18
Brake fluid level switch
31E<3

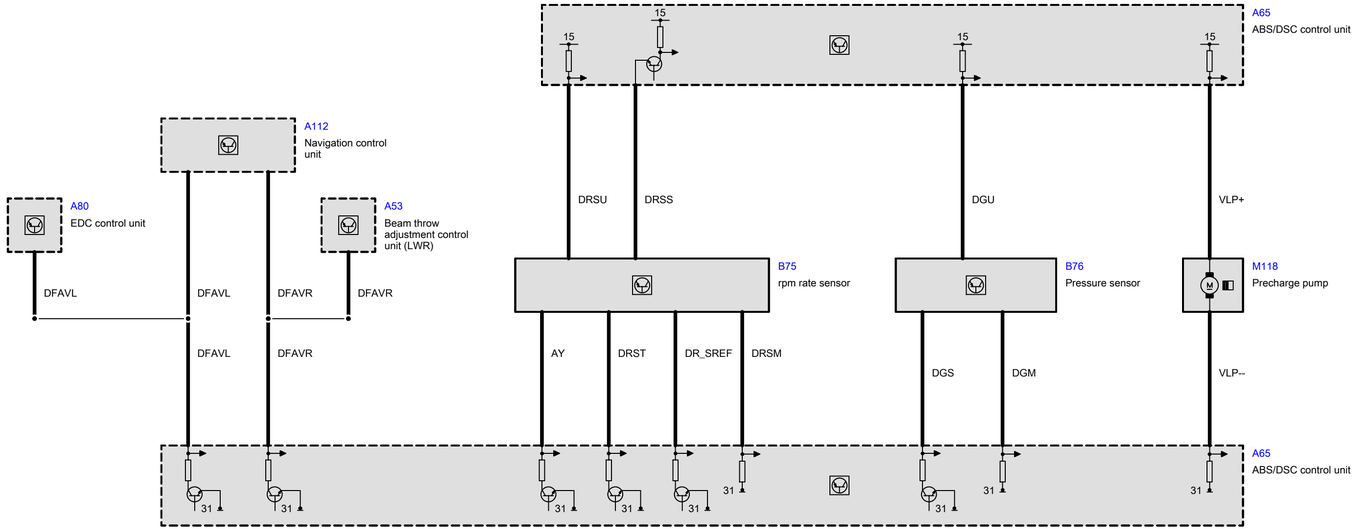
A65
ABS/DSC control unit
15
A112
Navigation control unit
A80
EDC control unit
A53
Beam throw adjustment control unit (LWR)
DFAVL
DFAVR
DRSU
DRSS
DGU
VLP+
B75
rpm rate sensor
B76
Pressure sensor
M118
Precharge pump
AY
DRST
DR_SREF
DRSM
DGS
DGM
VLP--
31