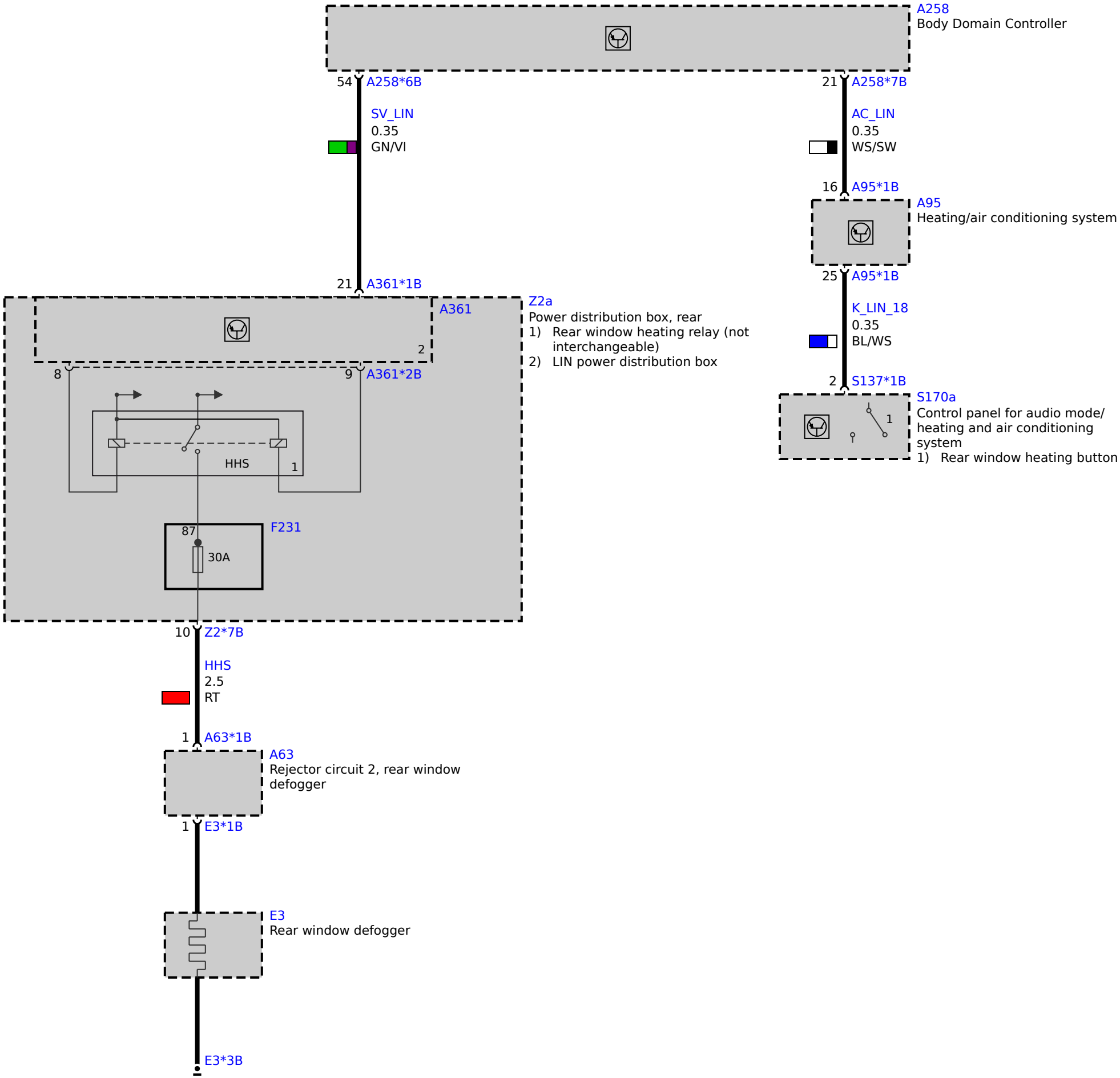
A258
Body Domain Controller
54
A258*6B
SV_LIN
0.35
GN/VI
21
A258*7B
AC_LIN
0.35
WS/SW
16
A95*1B
A95
Heating/air conditioning system
25
A95*1B
K_LIN_18
0.35
BL/WS
2
S137*1B
S170a
Control panel for audio mode/ heating and air conditioning system
1) Rear window heating button
1
21
A361*1B
A361
2
Z2a
Power distribution box, rear
1) Rear window heating relay (not interchangeable)
2) LIN power distribution box
8
9
A361*2B
HHS
1
87
F231
30A
10
Z2*7B
HHS
2.5
RT
1
A63*1B
A63
Rejector circuit 2, rear window defogger
1
E3*1B
E3
Rear window defogger
E3*3B