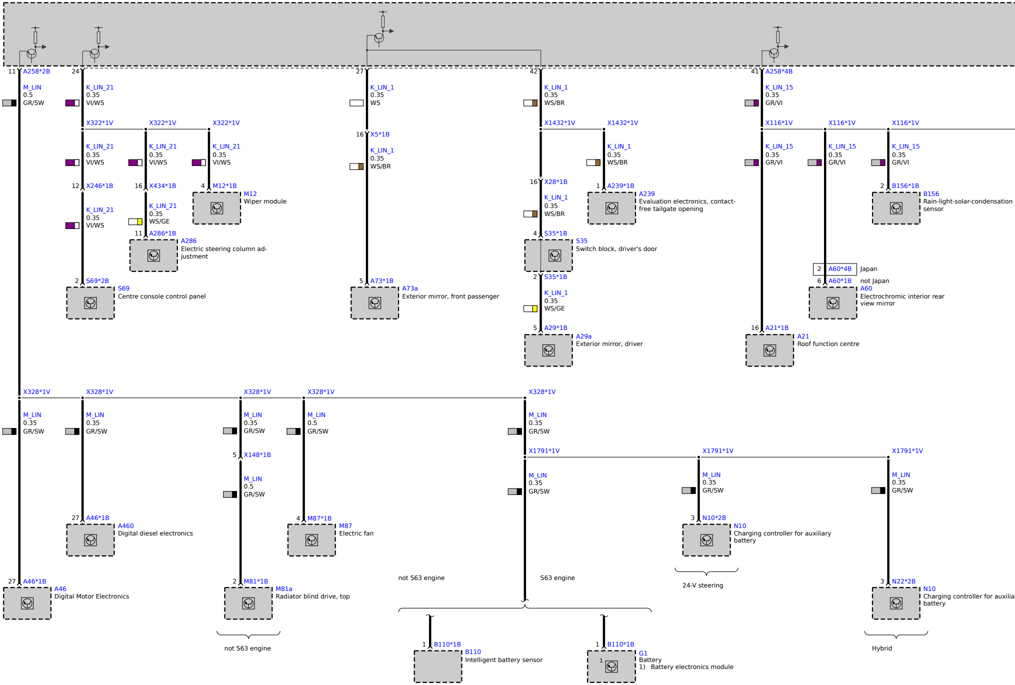
11 A258*2B
M_LIN
0.5
GR/SW
24
K_LIN_21
0.35
VI/WS
X322*1V
X322*1V
X322*1V
K_LIN_21
0.35
VI/WS
K_LIN_21
0.35
VI/WS
K_LIN_21
0.35
VI/WS
12 X246*1B
16 X434*1B
4 M12*1B
M12
Wiper module
K_LIN_21
0.35
VI/WS
K_LIN_21
0.35
WS/GE
11 A286*1B
A286
Electric steering column adjustment
2 S69*2B
S69
Centre console control panel
27
K_LIN_1
0.35
WS
16 X5*1B
K_LIN_1
0.35
WS/BR
5 A73*1B
A73a
Exterior mirror, front passenger
42
K_LIN_1
0.35
WS/BR
X1432*1V
X1432*1V
K_LIN_1
0.35
WS/BR
1 A239*1B
A239
Evaluation electronics, contact-free tailgate opening
16 X28*1B
K_LIN_1
0.35
WS/BR
4 S35*1B
S35
Switch block, driver's door
2 S35*1B
K_LIN_1
0.35
WS/GE
5 A29*1B
A29a
Exterior mirror, driver
41 A258*4B
K_LIN_15
0.35
GR/VI
X116*1V
X116*1V
X116*1V
K_LIN_15
0.35
GR/VI
K_LIN_15
0.35
GR/VI
K_LIN_15
0.35
GR/VI
2 B156*1B
B156
Rain-light-solar-condensation sensor
2 A60*4B Japan
6 A60*1B not Japan
A60
Electrochromic interior rear view mirror
16 A21*1B
A21
Roof function centre
X328*1V
X328*1V
X328*1V
X328*1V
X328*1V
M_LIN
0.35
GR/SW
M_LIN
0.35
GR/SW
M_LIN
0.35
GR/SW
M_LIN
0.5
GR/SW
M_LIN
0.35
GR/SW
5 X148*1B
M_LIN
0.5
GR/SW
X1791*1V
X1791*1V
X1791*1V
M_LIN
0.35
GR/SW
M_LIN
0.35
GR/SW
M_LIN
0.35
GR/SW
27 A46*1B
A460
Digital diesel electronics
4 M87*1B
M87
Electric fan
3 N10*2B
N10
Charging controller for auxiliary battery
24-V steering
27 A46*1B
A46
Digital Motor Electronics
2 M81*1B
M81a
Radiator blind drive, top
not S63 engine
not S63 engine
S63 engine
1 B110*1B
B110
Intelligent battery sensor
1 B110*1B
G1
Battery
1) Battery electronics module
1
3 N22*2B
N10
Charging controller for auxilia
battery
Hybrid

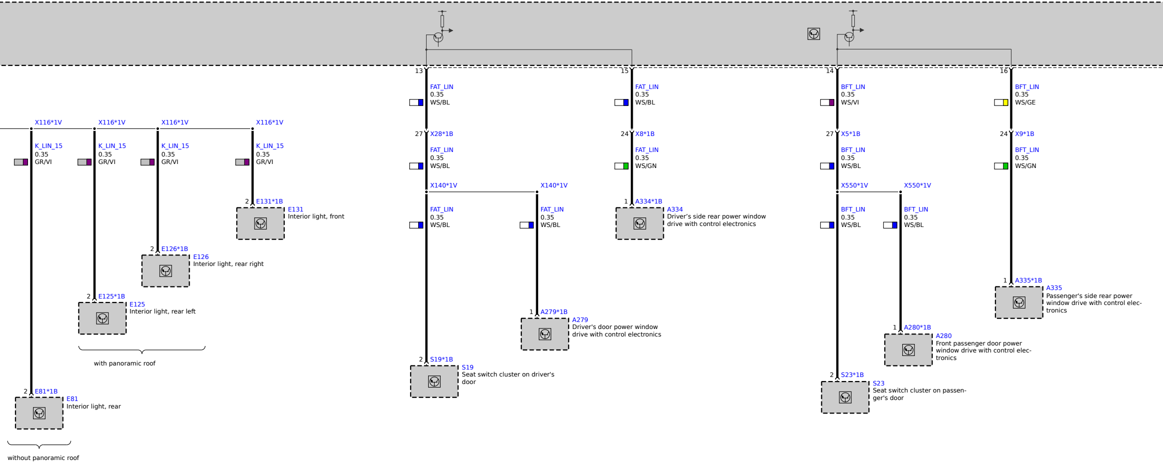
13
FAT_LIN
0.35
WS/BL
27
X28*1B
FAT_LIN
0.35
WS/BL
X140*1V
FAT_LIN
0.35
WS/BL
2
S19*1B
S19
Seat switch cluster on driver's door
X140*1V
FAT_LIN
0.35
WS/BL
1
A279*1B
A279
Driver's door power window drive with control electronics
15
FAT_LIN
0.35
WS/BL
24
X8*1B
FAT_LIN
0.35
WS/GN
1
A334*1B
A334
Driver's side rear power window drive with control electronics
14
BFT_LIN
0.35
WS/VI
27
X5*1B
BFT_LIN
0.35
WS/BL
X550*1V
BFT_LIN
0.35
WS/BL
2
S23*1B
S23
Seat switch cluster on passenger's door
X550*1V
BFT_LIN
0.35
WS/BL
1
A280*1B
A280
Front passenger door power window drive with control electronics
16
BFT_LIN
0.35
WS/GE
24
X9*1B
BFT_LIN
0.35
WS/GN
1
A335*1B
A335
Passenger's side rear power window drive with control electronics
X116*1V
K_LIN_15
0.35
GR/VI
2
E81*1B
E81
Interior light, rear
without panoramic roof
X116*1V
K_LIN_15
0.35
GR/VI
2
E125*1B
E125
Interior light, rear left
X116*1V
K_LIN_15
0.35
GR/VI
2
E126*1B
E126
Interior light, rear right
with panoramic roof
X116*1V
K_LIN_15
0.35
GR/VI
2
E131*1B
E131
Interior light, front

ry

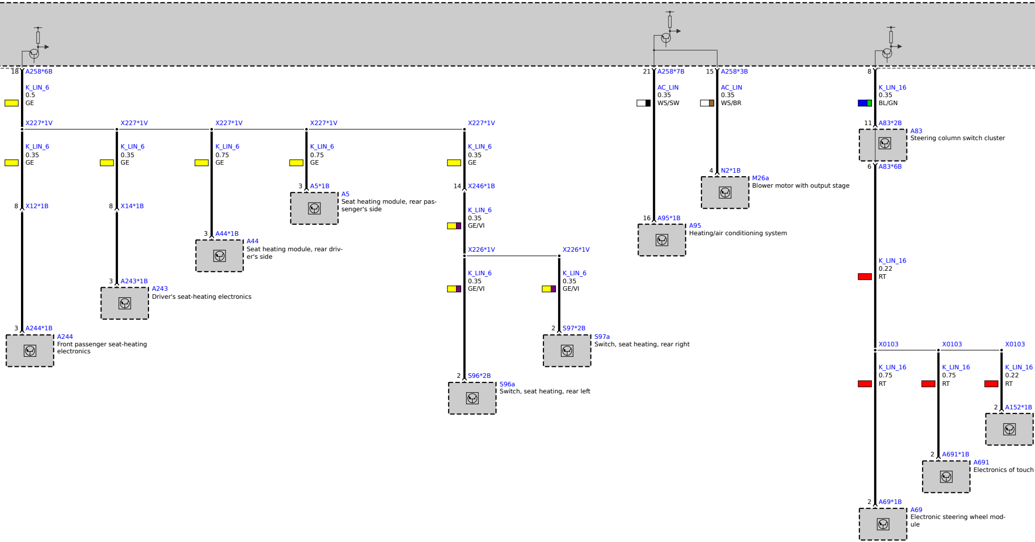

18 A258*6B
K_LIN_6
0.5
GE
X227*1V
K_LIN_6
0.35
GE
8 X12*1B
3 A244*1B
A244
Front passenger seat-heating electronics
X227*1V
K_LIN_6
0.35
GE
8 X14*1B
3 A243*1B
A243
Driver's seat-heating electronics
X227*1V
K_LIN_6
0.75
GE
3 A44*1B
A44
Seat heating module, rear driver's side
X227*1V
K_LIN_6
0.75
GE
3 A5*1B
A5
Seat heating module, rear passenger's side
X227*1V
K_LIN_6
0.35
GE
14 X246*1B
K_LIN_6
0.35
GE/VI
X226*1V
K_LIN_6
0.35
GE/VI
2 S96*2B
S96a
Switch, seat heating, rear left
X226*1V
K_LIN_6
0.35
GE/VI
2 S97*2B
S97a
Switch, seat heating, rear right
21 A258*7B
AC_LIN
0.35
WS/SW
16 A95*1B
A95
Heating/air conditioning system
15 A258*3B
AC_LIN
0.35
WS/BR
4 N2*1B
M26a
Blower motor with output stage
8
K_LIN_16
0.35
BL/GN
11 A83*2B
A83
Steering column switch cluster
6 A83*6B
K_LIN_16
0.22
RT
X0103
K_LIN_16
0.75
RT
2 A69*1B
A69
Electronic steering wheel module
X0103
K_LIN_16
0.75
RT
2 A691*1B
A691
Electronics of touch
X0103
K_LIN_16
0.22
RT
2 A152*1B

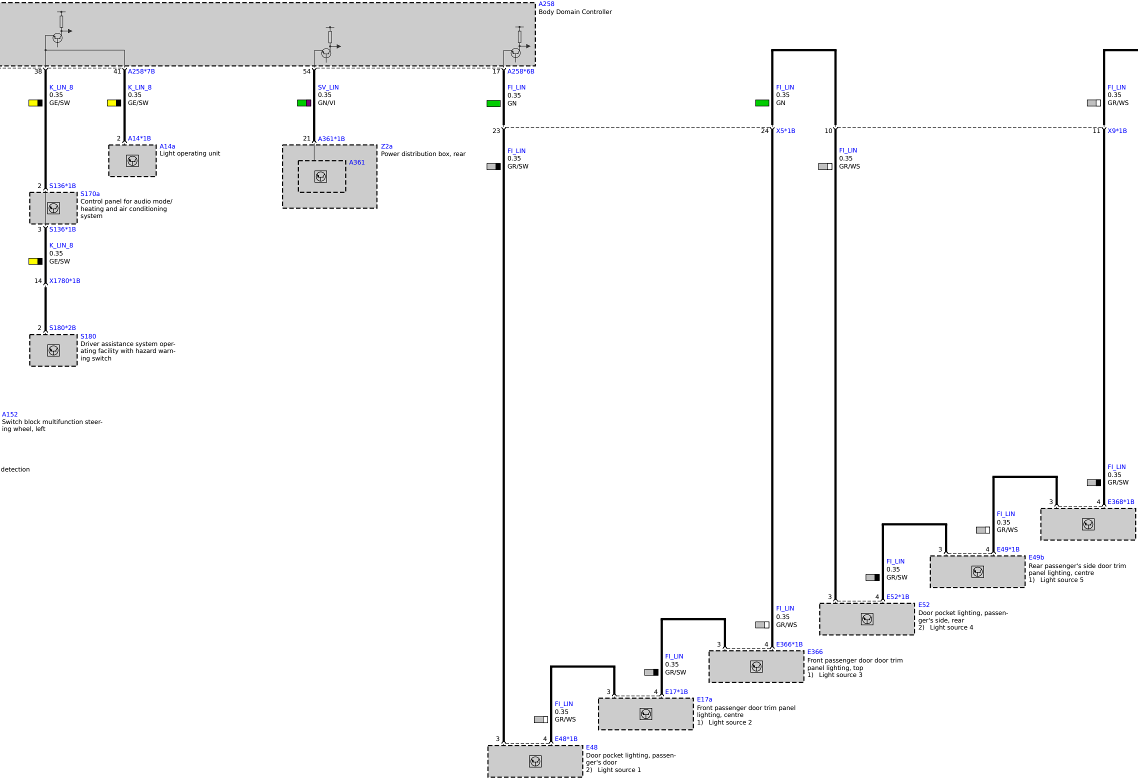
A258
Body Domain Controller
38
K_LIN_8
0.35
GE/SW
41
A258*7B
K_LIN_8
0.35
GE/SW
2
A14*1B
A14a
Light operating unit
54
SV_LIN
0.35
GN/VI
21
A361*1B
Z2a
Power distribution box, rear
A361
17
A258*6B
FI_LIN
0.35
GN
23
FI_LIN
0.35
GR/SW
FI_LIN
0.35
GN
24
X5*1B
10
FI_LIN
0.35
GR/WS
FI_LIN
0.35
GR/WS
11
X9*1B
2
S136*1B
S170a
Control panel for audio mode/
heating and air conditioning
system
3
S136*1B
K_LIN_8
0.35
GE/SW
14
X1780*1B
2
S180*2B
S180
Driver assistance system oper-
ating facility with hazard warn-
ing switch
A152
Switch block multifunction steer-
ing wheel, left
detection
FI_LIN
0.35
GR/SW
3
4
E368*1B
FI_LIN
0.35
GR/WS
3
4
E49*1B
E49b
Rear passenger's side door trim
panel lighting, centre
1) Light source 5
FI_LIN
0.35
GR/SW
3
4
E52*1B
E52
Door pocket lighting, passen-
ger's side, rear
2) Light source 4
FI_LIN
0.35
GR/WS
3
4
E366*1B
E366
Front passenger door door trim
panel lighting, top
1) Light source 3
FI_LIN
0.35
GR/SW
3
4
E17*1B
E17a
Front passenger door trim panel
lighting, centre
1) Light source 2
FI_LIN
0.35
GR/WS
3
4
E48*1B
E48
Door pocket lighting, passen-
ger's door
2) Light source 1

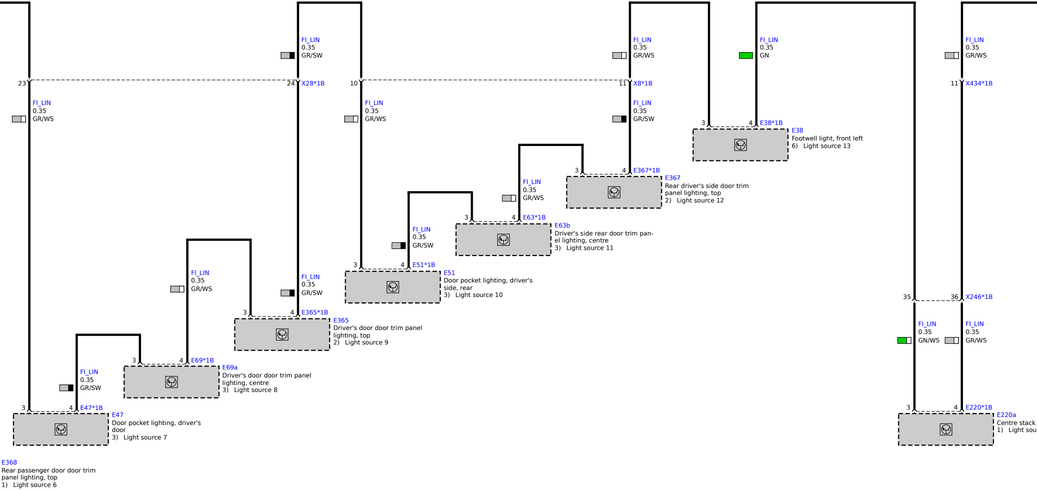
FI_LIN
0.35
GR/SW
FI_LIN
0.35
GR/WS
FI_LIN
0.35
GN
FI_LIN
0.35
GR/WS
23
24
X28*1B
10
11
X8*1B
11
X434*1B
FI_LIN
0.35
GR/WS
FI_LIN
0.35
GR/WS
FI_LIN
0.35
GR/SW
3
4
E38*1B
E38
Footwell light, front left
6) Light source 13
FI_LIN
0.35
GR/WS
3
4
E367*1B
E367
Rear driver's side door trim panel lighting, top
2) Light source 12
FI_LIN
0.35
GR/SW
3
4
E63*1B
E63b
Driver's side rear door trim panel lighting, centre
3) Light source 11
FI_LIN
0.35
GR/WS
FI_LIN
0.35
GR/SW
3
4
E51*1B
E51
Door pocket lighting, driver's side, rear
3) Light source 10
35
36
X246*1B
FI_LIN
0.35
GN/WS
FI_LIN
0.35
GR/WS
3
4
E365*1B
E365
Driver's door door trim panel lighting, top
2) Light source 9
FI_LIN
0.35
GR/SW
3
4
E69*1B
E69a
Driver's door door trim panel lighting, centre
3) Light source 8
3
4
E47*1B
E47
Door pocket lighting, driver's door
3) Light source 7
3
4
E220*1B
E220a
Centre stack
1) Light sou
E368
Rear passenger door door trim panel lighting, top
1) Light source 6

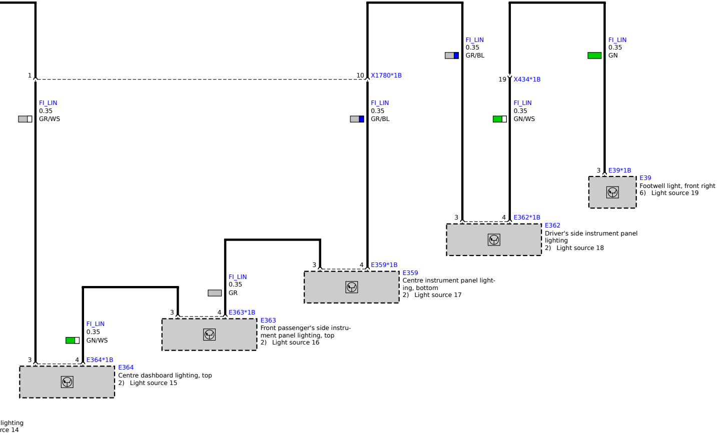
1
X1780*1B
10
FI_LIN
0.35
GR/WS
FI_LIN
0.35
GR/BL
FI_LIN
0.35
GR/BL
19
X434*1B
FI_LIN
0.35
GN/WS
FI_LIN
0.35
GN
3
E39*1B
E39
Footwell light, front right
6) Light source 19
3
4
E362*1B
E362
Driver's side instrument panel lighting
2) Light source 18
3
4
E359*1B
E359
Centre instrument panel lighting, bottom
2) Light source 17
FI_LIN
0.35
GR
3
4
E363*1B
E363
Front passenger's side instrument panel lighting, top
2) Light source 16
FI_LIN
0.35
GN/WS
3
4
E364*1B
E364
Centre dashboard lighting, top
2) Light source 15
lighting
rce 14