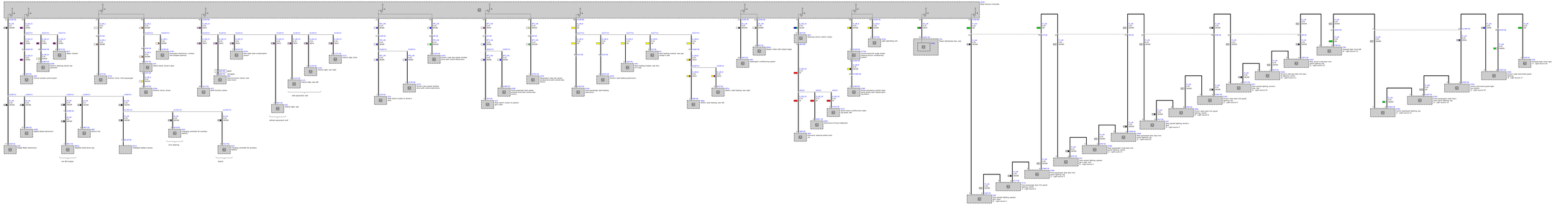
Body Domain Controller
Rear Motor Electronics
Rear Module
Steering column adjustment
Steering column control panel
Signal detect electronics
Battery fan
Rear Motor Drive Unit, Top
Intelligent battery sensor
Rear Motor Drive Unit, Bottom
Rear Motor Drive Unit, Bottom
Rear Motor Drive Unit, Bottom