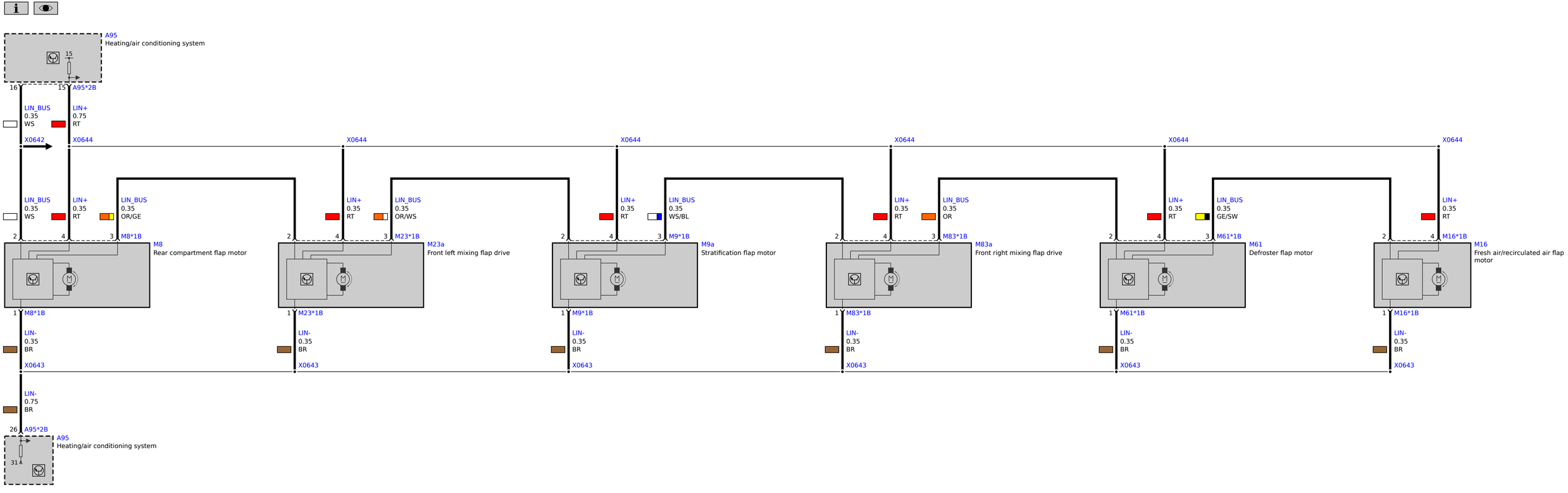
A95
Heating/air conditioning system
15
16
15
A95*2B
LIN_BUS
0.35
WS
LIN+
0.75
RT
X0642
X0644
X0644
X0644
X0644
X0644
X0644
LIN_BUS
0.35
WS
LIN+
0.35
RT
LIN_BUS
0.35
OR/GE
2
4
3
M8*1B
M8
Rear compartment flap motor
LIN+
0.35
RT
LIN_BUS
0.35
OR/WS
M23*1B
M23a
Front left mixing flap drive
LIN+
0.35
RT
LIN_BUS
0.35
WS/BL
M9*1B
M9a
Stratification flap motor
LIN+
0.35
RT
LIN_BUS
0.35
OR
M83*1B
M83a
Front right mixing flap drive
LIN+
0.35
RT
LIN_BUS
0.35
GE/SW
M61*1B
M61
Defroster flap motor
LIN+
0.35
RT
M16*1B
M16
Fresh air/recirculated air flap motor
1
M8*1B
M23*1B
M9*1B
M83*1B
M61*1B
M16*1B
LIN-
0.35
BR
X0643
LIN-
0.75
BR
26
A95*2B
A95
Heating/air conditioning system
31