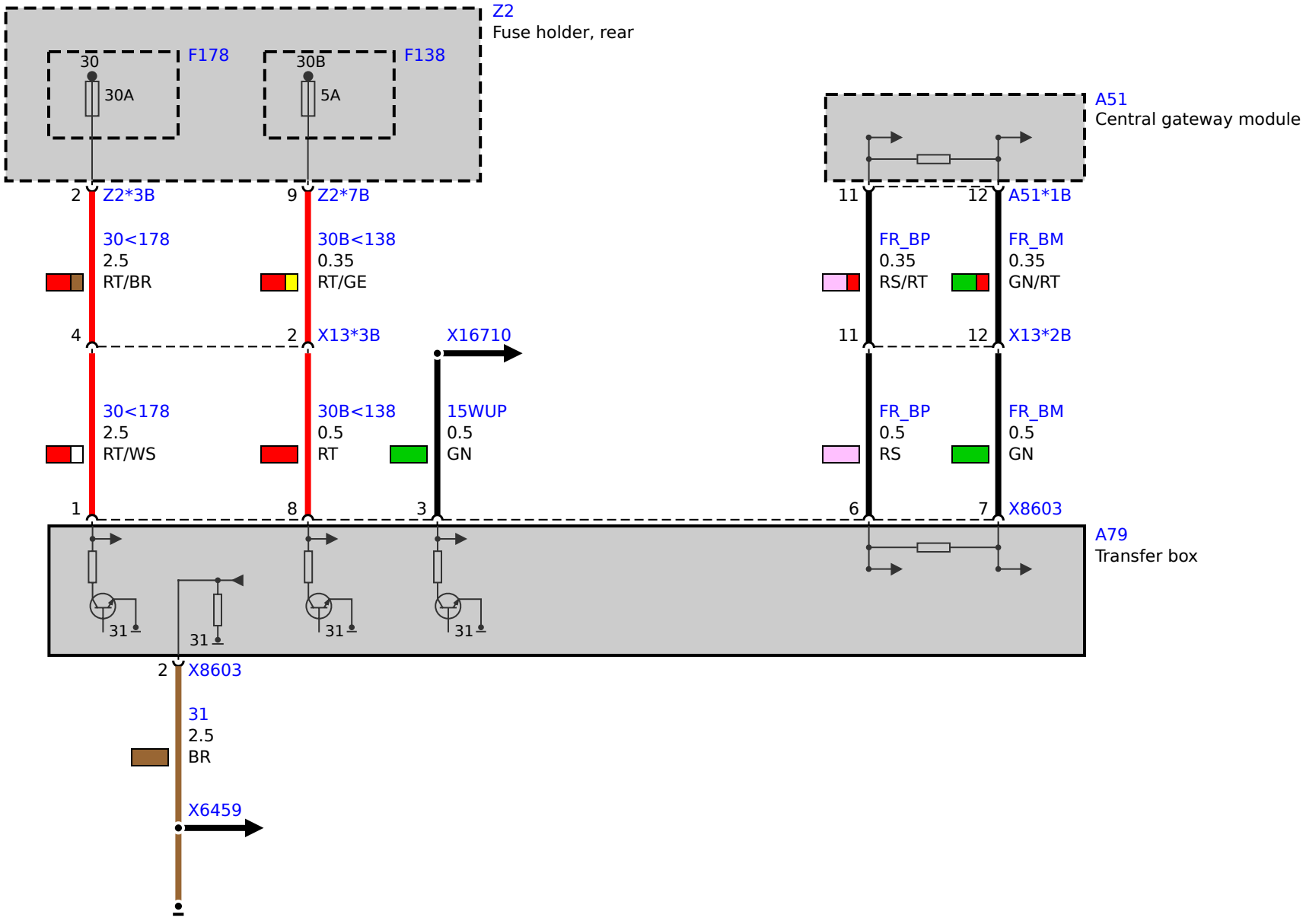
Z2
Fuse holder, rear
30
F178
30A
30B
F138
5A
A51
Central gateway module
2
Z2*3B
9
Z2*7B
11
12
A51*1B
30<178
2.5
RT/BR
30B<138
0.35
RT/GE
FR_BP
0.35
RS/RT
FR_BM
0.35
GN/RT
4
2
X13*3B
X16710
11
12
X13*2B
30<178
2.5
RT/WS
30B<138
0.5
RT
15WUP
0.5
GN
FR_BP
0.5
RS
FR_BM
0.5
GN
1
8
3
6
7
X8603
A79
Transfer box
31
31
31
31
2
X8603
31
2.5
BR
X6459