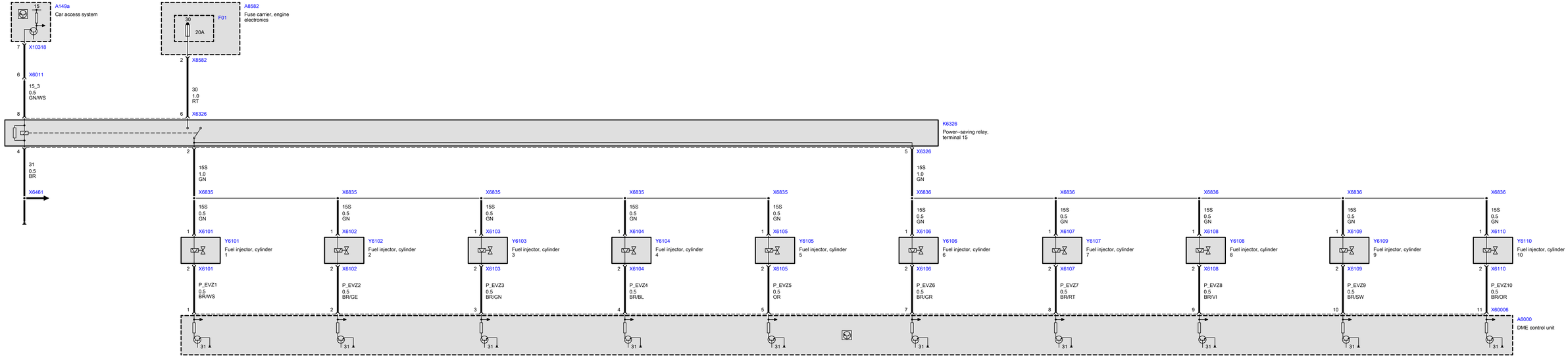
A149a
Car access system
15
7
X10318
6
X6011
15_3
0.5
GN/WS
8
A8582
Fuse carrier, engine electronics
F01
30
20A
2
X8582
30
1.0
RT
6
X6326
K6326
Power--saving relay, terminal 15
4
2
5
X6326
31
0.5
BR
X6461
15S
1.0
GN
X6835
X6836
15S
0.5
GN
1
2
X6101
X6102
X6103
X6104
X6105
X6106
X6107
X6108
X6109
X6110
Y6101
Fuel injector, cylinder 1
Y6102
Fuel injector, cylinder 2
Y6103
Fuel injector, cylinder 3
Y6104
Fuel injector, cylinder 4
Y6105
Fuel injector, cylinder 5
Y6106
Fuel injector, cylinder 6
Y6107
Fuel injector, cylinder 7
Y6108
Fuel injector, cylinder 8
Y6109
Fuel injector, cylinder 9
Y6110
Fuel injector, cylinder 10
P_EVZ1
0.5
BR/WS
P_EVZ2
0.5
BR/GE
P_EVZ3
0.5
BR/GN
P_EVZ4
0.5
BR/BL
P_EVZ5
0.5
OR
P_EVZ6
0.5
BR/GR
P_EVZ7
0.5
BR/RT
P_EVZ8
0.5
BR/VI
P_EVZ9
0.5
BR/SW
P_EVZ10
0.5
BR/OR
1
2
3
4
5
7
8
9
10
11
X60006
A6000
DME control unit
31