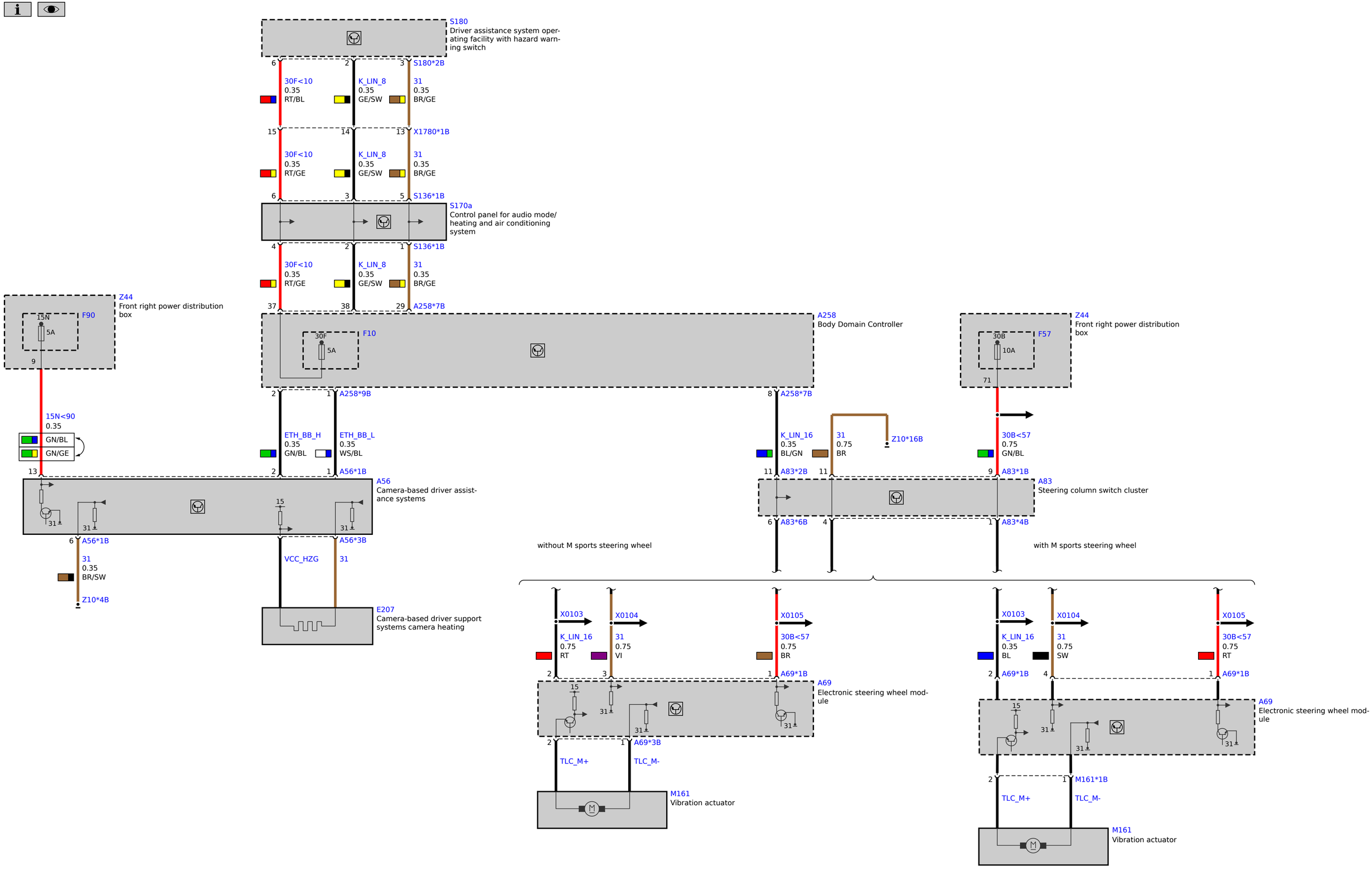
S180
Driver assistance system operating facility with hazard warning switch
S180*2B
30F<10
0.35
RT/BL
K_LIN_8
0.35
GE/SW
31
0.35
BR/GE
X1780*1B
30F<10
0.35
RT/GE
K_LIN_8
0.35
GE/SW
31
0.35
BR/GE
S136*1B
S170a
Control panel for audio mode/heating and air conditioning system
S136*1B
30F<10
0.35
RT/GE
K_LIN_8
0.35
GE/SW
31
0.35
BR/GE
A258*7B
Z44
Front right power distribution box
F90
15N
5A
A258
Body Domain Controller
F10
30F
5A
Z44
Front right power distribution box
F57
30B
10A
A258*9B
ETH_BB_H
0.35
GN/BL
ETH_BB_L
0.35
WS/BL
A56*1B
A258*7B
K_LIN_16
0.35
BL/GN
31
0.75
BR
Z10*16B
30B<57
0.75
GN/BL
A83*1B
15N<90
0.35
GN/BL
GN/GE
A56
Camera-based driver assistance systems
A83*2B
A83
Steering column switch cluster
A83*6B
A83*4B
A56*1B
31
0.35
BR/SW
Z10*4B
A56*3B
VCC_HZG
31
E207
Camera-based driver support systems camera heating
without M sports steering wheel
with M sports steering wheel
X0103
K_LIN_16
0.75
RT
X0104
31
0.75
VI
X0105
30B<57
0.75
BR
A69*1B
A69
Electronic steering wheel module
A69*3B
TLC_M+
TLC_M-
M161
Vibration actuator
X0103
K_LIN_16
0.35
BL
X0104
31
0.75
SW
X0105
30B<57
0.75
RT
A69*1B
A69
Electronic steering wheel module
M161*1B
TLC_M+
TLC_M-
M161
Vibration actuator