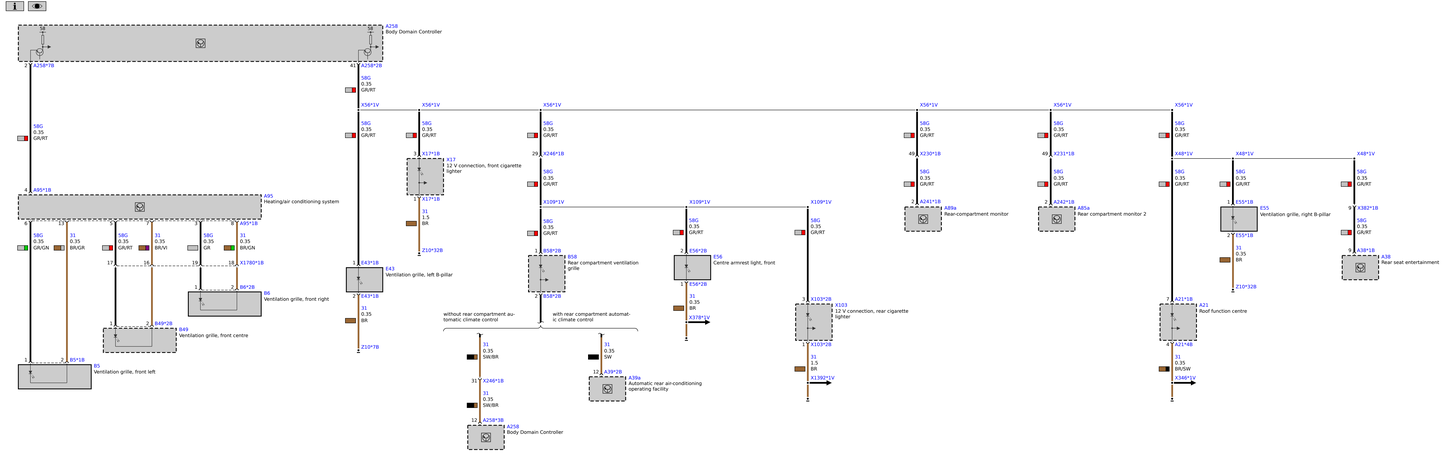
A258 Body Domain Controller
A258*7B
A258*1B
58G 0.35 GR/RT
A65*1B
A65 Heating/air conditioning system
58G 0.35 GR/OR
31 0.35 BR/GR
58G 0.35 GR/RT
31 0.35 BR/VI
58G 0.35 GR
31 0.35 BR/GN
A65*1B
X1780*1B
B6*2B
B6 Ventilation grille, front right
B49*2B
B49 Ventilation grille, front centre
B5*1B
B5 Ventilation grille, front left
X58*1V
X1718*1B
X17 12 V connection, front cigarette lighter
X17*1B
31 0.35 BR
Z10*32B
E43*1B
E43 Ventilation grille, left B-pillar
E43*1B
31 0.35 BR
Z10*7B
X246*1B
X246 Rear compartment ventilation grille
B58*2B
B58 Rear compartment ventilation grille
without rear compartment automatic climate control
with rear compartment automatic climate control
31 0.35 SW/BR
X246*1B
31 0.35 SW/BR
A258*3B
A258 Body Domain Controller
31 0.35 SW
A39*2B
A39a Automatic rear air-conditioning operating facility
X109*1V
X1092*1B
X109 Rear compartment monitor
A89a Rear compartment monitor
X1092*1B
X1093*1B
X109 Rear compartment monitor 2
A89a Rear compartment monitor 2
X1093*1B
X1094*1B
X109 Rear compartment monitor 3
A89a Rear compartment monitor 3
X1094*1B
X1095*1B
X109 Rear compartment monitor 4
A89a Rear compartment monitor 4
X1095*1B
X1096*1B
X109 Rear compartment monitor 5
A89a Rear compartment monitor 5
X1096*1B
X1097*1B
X109 Rear compartment monitor 6
A89a Rear compartment monitor 6
X1097*1B
X1098*1B
X109 Rear compartment monitor 7
A89a Rear compartment monitor 7
X1098*1B
X1099*1B
X109 Rear compartment monitor 8
A89a Rear compartment monitor 8
X1099*1B
X1100*1B
X110 Rear compartment monitor 9
A89a Rear compartment monitor 9
X1100*1B
X1101*1B
X110 Rear compartment monitor 10
A89a Rear compartment monitor 10
X1101*1B
X1102*1B
X110 Rear compartment monitor