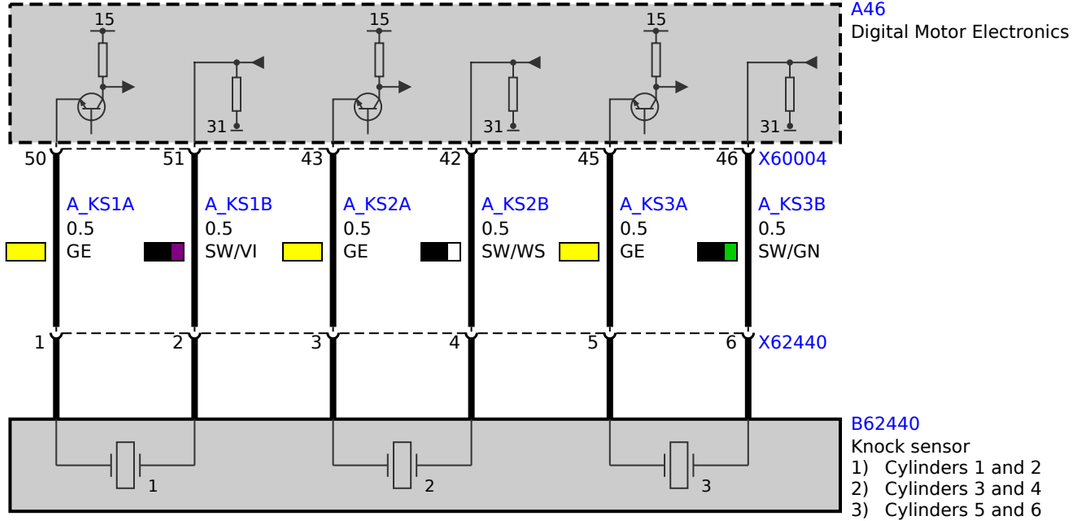
A46
Digital Motor Electronics
15
31
50
51
43
42
45
46
X60004
A_KS1A
0.5
GE
A_KS1B
0.5
SW/VI
A_KS2A
0.5
GE
A_KS2B
0.5
SW/WS
A_KS3A
0.5
GE
A_KS3B
0.5
SW/GN
1
2
3
4
5
6
X62440
B62440
Knock sensor
1) Cylinders 1 and 2
2) Cylinders 3 and 4
3) Cylinders 5 and 6

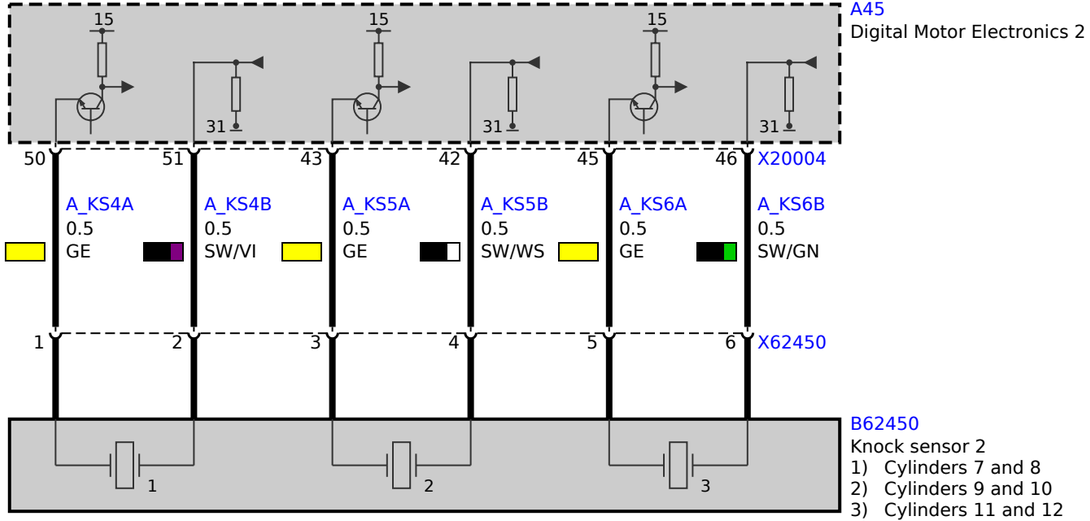
A45
Digital Motor Electronics 2
15
31
50
51
43
42
45
46
X20004
A_KS4A
0.5
GE
A_KS4B
0.5
SW/VI
A_KS5A
0.5
GE
A_KS5B
0.5
SW/WS
A_KS6A
0.5
GE
A_KS6B
0.5
SW/GN
1
2
3
4
5
6
X62450
B62450
Knock sensor 2
1) Cylinders 7 and 8
2) Cylinders 9 and 10
3) Cylinders 11 and 12