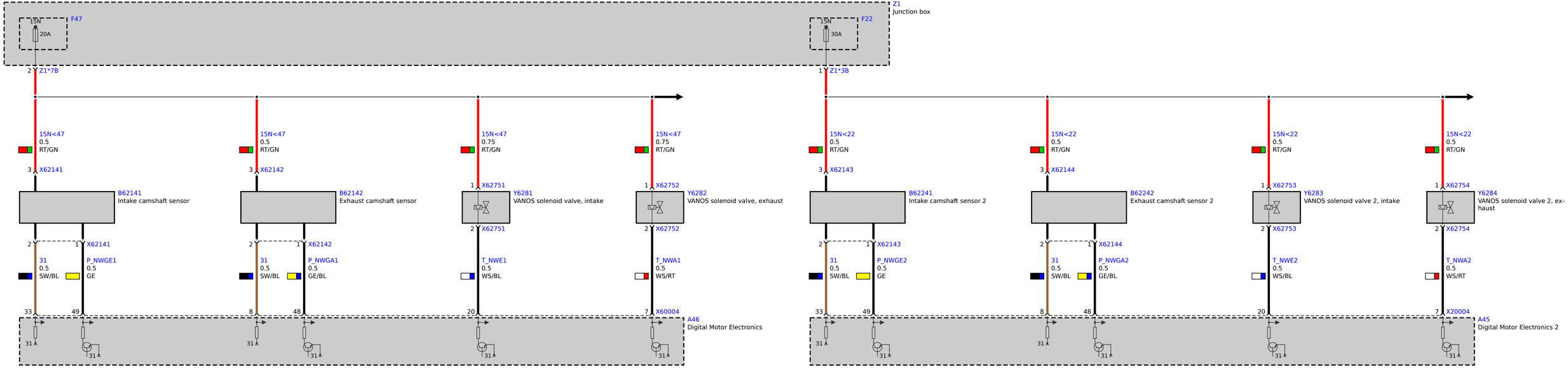
Z1
Junction box
15N
20A
F47
15N
30A
F22
2 Z1*7B
1 Z1*3B
15N<47
0.5
RT/GN
15N<47
0.5
RT/GN
15N<47
0.75
RT/GN
15N<47
0.75
RT/GN
15N<22
0.5
RT/GN
15N<22
0.5
RT/GN
15N<22
0.5
RT/GN
15N<22
0.5
RT/GN
3 X62141
3 X62142
1 X62751
1 X62752
3 X62143
3 X62144
1 X62753
1 X62754
B62141
Intake camshaft sensor
B62142
Exhaust camshaft sensor
Y6281
VANOS solenoid valve, intake
Y6282
VANOS solenoid valve, exhaust
B62241
Intake camshaft sensor 2
B62242
Exhaust camshaft sensor 2
Y6283
VANOS solenoid valve 2, intake
Y6284
VANOS solenoid valve 2, ex-
haust
2 X62751
2 X62752
2 X62753
2 X62754
2 1 X62141
2 1 X62142
2 1 X62143
2 1 X62144
31
0.5
SW/BL
P_NWGE1
0.5
GE
31
0.5
SW/BL
P_NWGA1
0.5
GE/BL
T_NWE1
0.5
WS/BL
T_NWA1
0.5
WS/RT
31
0.5
SW/BL
P_NWGE2
0.5
GE
31
0.5
SW/BL
P_NWGA2
0.5
GE/BL
T_NWE2
0.5
WS/BL
T_NWA2
0.5
WS/RT
33
49
8
48
20
7 X60004
33
49
8
48
20
7 X20004
A46
Digital Motor Electronics
A45
Digital Motor Electronics 2
31
31
31
31
31
31
31
31
31
31
31
31