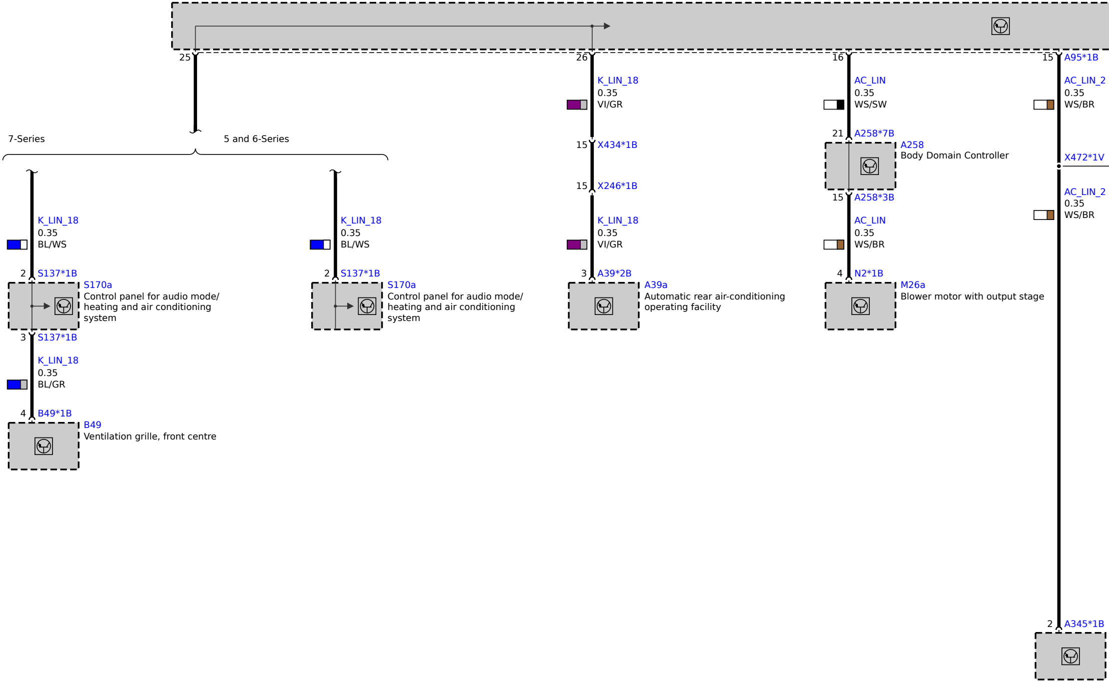
25
26
16
15
A95*1B
K_LIN_18
0.35
VI/GR
AC_LIN
0.35
WS/SW
AC_LIN_2
0.35
WS/BR
7-Series
5 and 6-Series
21
A258*7B
A258
Body Domain Controller
15
X434*1B
X472*1V
15
X246*1B
15
A258*3B
AC_LIN_2
0.35
WS/BR
K_LIN_18
0.35
BL/WS
K_LIN_18
0.35
BL/WS
K_LIN_18
0.35
VI/GR
AC_LIN
0.35
WS/BR
2
S137*1B
S170a
Control panel for audio mode/ heating and air conditioning system
2
S137*1B
S170a
Control panel for audio mode/ heating and air conditioning system
3
A39*2B
A39a
Automatic rear air-conditioning operating facility
4
N2*1B
M26a
Blower motor with output stage
3
S137*1B
K_LIN_18
0.35
BL/GR
4
B49*1B
B49
Ventilation grille, front centre
2
A345*1B

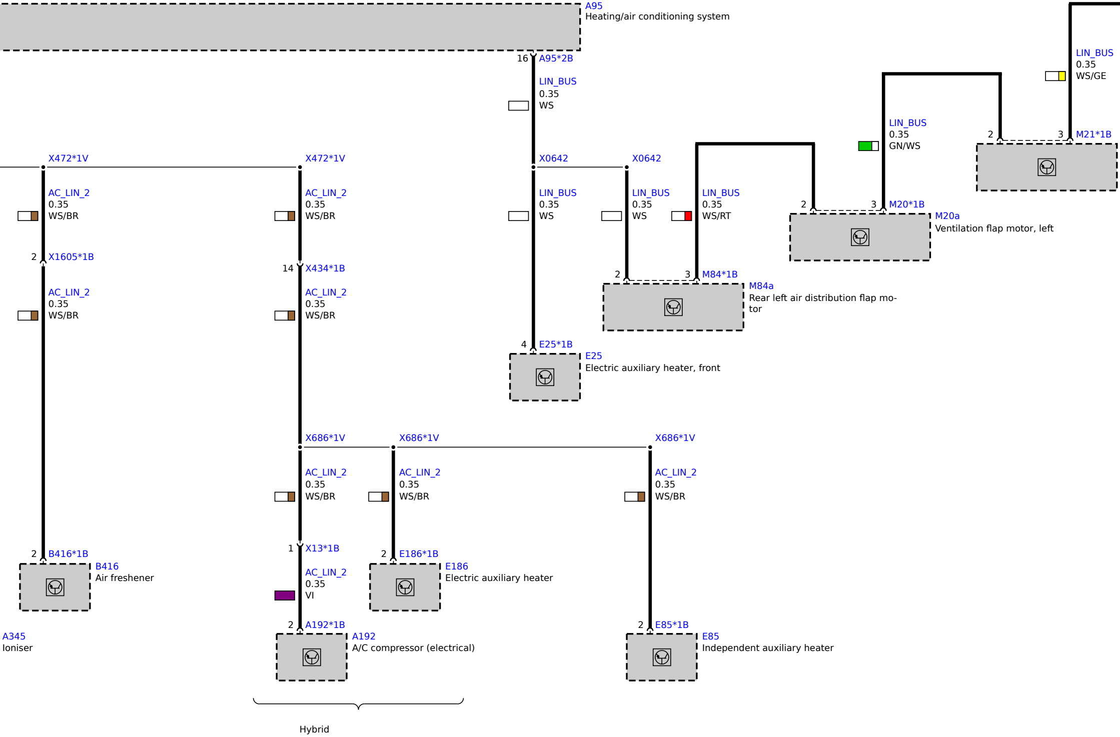
A95
Heating/air conditioning system
16
A95*2B
LIN_BUS
0.35
WS
LIN_BUS
0.35
WS/GE
LIN_BUS
0.35
GN/WS
2
3
M21*1B
X472*1V
X472*1V
X0642
X0642
AC_LIN_2
0.35
WS/BR
AC_LIN_2
0.35
WS/BR
LIN_BUS
0.35
WS
LIN_BUS
0.35
WS
LIN_BUS
0.35
WS/RT
2
3
M20*1B
M20a
Ventilation flap motor, left
2
X1605*1B
14
X434*1B
2
3
M84*1B
M84a
Rear left air distribution flap motor
AC_LIN_2
0.35
WS/BR
AC_LIN_2
0.35
WS/BR
4
E25*1B
E25
Electric auxiliary heater, front
X686*1V
X686*1V
X686*1V
AC_LIN_2
0.35
WS/BR
AC_LIN_2
0.35
WS/BR
AC_LIN_2
0.35
WS/BR
2
B416*1B
B416
Air freshener
1
X13*1B
2
E186*1B
E186
Electric auxiliary heater
AC_LIN_2
0.35
VI
2
A192*1B
A192
A/C compressor (electrical)
2
E85*1B
E85
Independent auxiliary heater
A345
Ioniser
Hybrid

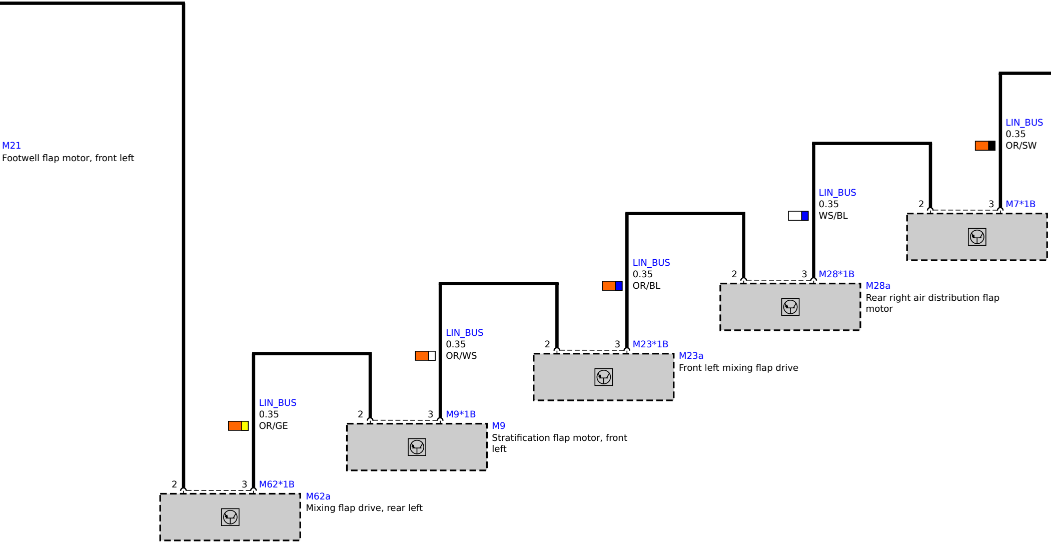
M21
Footwell flap motor, front left
LIN_BUS
0.35
OR/SW
M7*1B
2
3
LIN_BUS
0.35
WS/BL
M28*1B
2
3
M28a
Rear right air distribution flap motor
LIN_BUS
0.35
OR/BL
M23*1B
2
3
M23a
Front left mixing flap drive
LIN_BUS
0.35
OR/WS
M9*1B
2
3
M9
Stratification flap motor, front left
LIN_BUS
0.35
OR/GE
M62*1B
2
3
M62a
Mixing flap drive, rear left

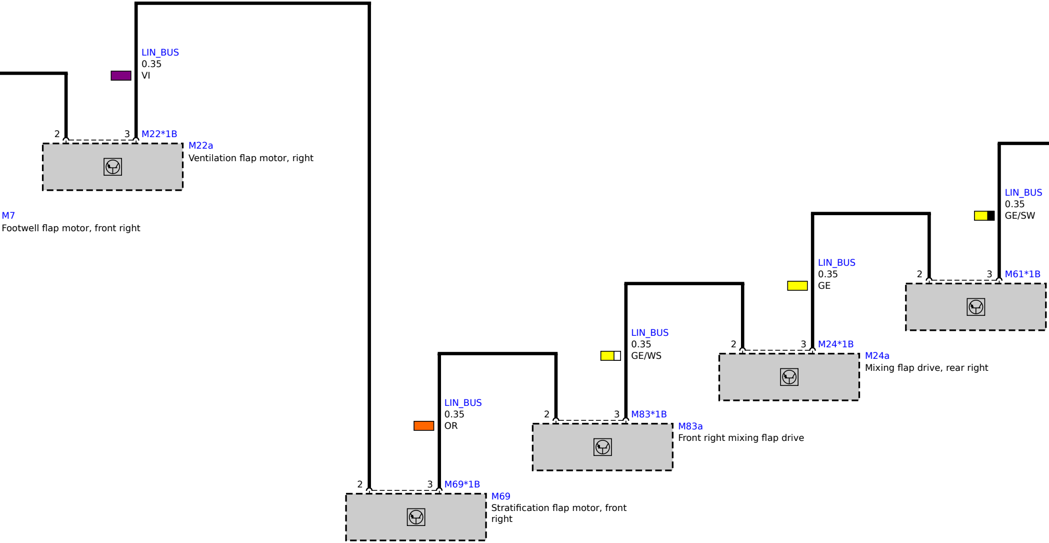
LIN_BUS
0.35
VI
2
3
M22*1B
M22a
Ventilation flap motor, right
M7
Footwell flap motor, front right
LIN_BUS
0.35
GE/SW
LIN_BUS
0.35
GE
2
3
M61*1B
LIN_BUS
0.35
GE/WS
2
3
M24*1B
M24a
Mixing flap drive, rear right
LIN_BUS
0.35
OR
2
3
M83*1B
M83a
Front right mixing flap drive
2
3
M69*1B
M69
Stratification flap motor, front right

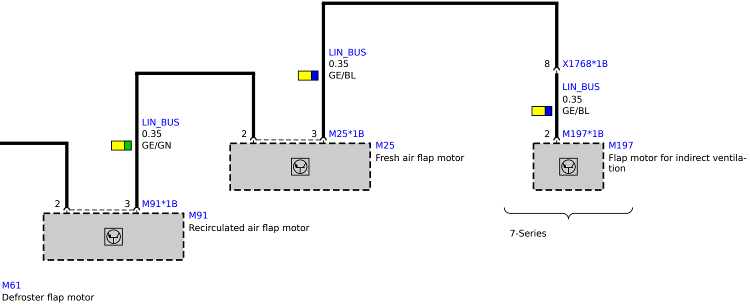
LIN_BUS
0.35
GE/BL
8
X1768*1B
LIN_BUS
0.35
GE/BL
LIN_BUS
0.35
GE/GN
2
3
M25*1B
M25
Fresh air flap motor
2
M197*1B
M197
Flap motor for indirect ventilation
2
3
M91*1B
M91
Recirculated air flap motor
7-Series
M61
Defroster flap motor