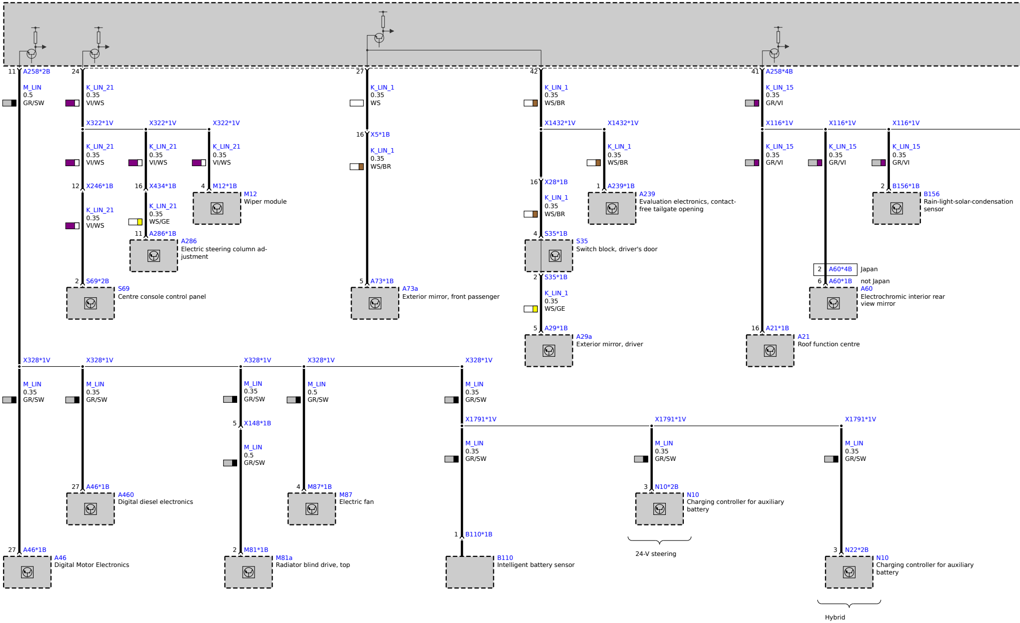
11 A258*2B
M_LIN
0.5
GR/SW
24
K_LIN_21
0.35
VI/WS
X322*1V
X322*1V
X322*1V
K_LIN_21
0.35
VI/WS
K_LIN_21
0.35
VI/WS
K_LIN_21
0.35
VI/WS
12 X246*1B
16 X434*1B
4 M12*1B
M12
Wiper module
K_LIN_21
0.35
VI/WS
K_LIN_21
0.35
WS/GE
11 A286*1B
A286
Electric steering column adjustment
2 S69*2B
S69
Centre console control panel
27
K_LIN_1
0.35
WS
16 X5*1B
K_LIN_1
0.35
WS/BR
5 A73*1B
A73a
Exterior mirror, front passenger
42
K_LIN_1
0.35
WS/BR
X1432*1V
X1432*1V
K_LIN_1
0.35
WS/BR
1 A239*1B
A239
Evaluation electronics, contact-free tailgate opening
16 X28*1B
K_LIN_1
0.35
WS/BR
4 S35*1B
S35
Switch block, driver's door
2 S35*1B
K_LIN_1
0.35
WS/GE
5 A29*1B
A29a
Exterior mirror, driver
41 A258*4B
K_LIN_15
0.35
GR/VI
X116*1V
X116*1V
X116*1V
K_LIN_15
0.35
GR/VI
K_LIN_15
0.35
GR/VI
K_LIN_15
0.35
GR/VI
2 B156*1B
B156
Rain-light-solar-condensation sensor
2 A60*4B Japan
6 A60*1B not Japan
A60
Electrochromic interior rear view mirror
16 A21*1B
A21
Roof function centre
X328*1V
X328*1V
X328*1V
X328*1V
X328*1V
M_LIN
0.35
GR/SW
M_LIN
0.35
GR/SW
M_LIN
0.35
GR/SW
M_LIN
0.5
GR/SW
M_LIN
0.35
GR/SW
5 X148*1B
M_LIN
0.5
GR/SW
X1791*1V
X1791*1V
X1791*1V
M_LIN
0.35
GR/SW
M_LIN
0.35
GR/SW
M_LIN
0.35
GR/SW
27 A46*1B
A460
Digital diesel electronics
4 M87*1B
M87
Electric fan
3 N10*2B
N10
Charging controller for auxiliary battery
24-V steering
1 B110*1B
B110
Intelligent battery sensor
27 A46*1B
A46
Digital Motor Electronics
2 M81*1B
M81a
Radiator blind drive, top
3 N22*2B
N10
Charging controller for auxiliary battery
Hybrid

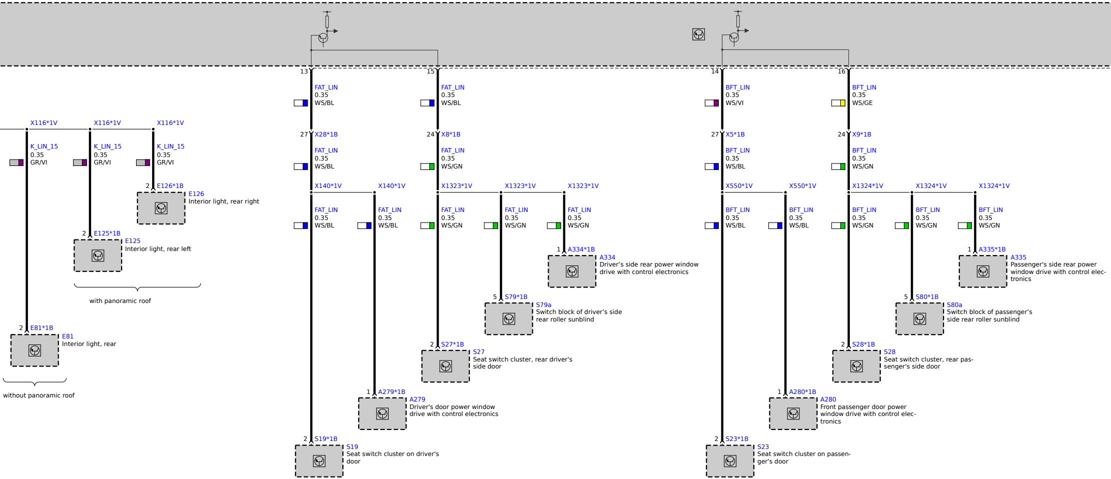
13
FAT_LIN
0.35
WS/BL
15
FAT_LIN
0.35
WS/BL
14
BFT_LIN
0.35
WS/VI
16
BFT_LIN
0.35
WS/GE
X116*1V
X116*1V
X116*1V
K_LIN_15
0.35
GR/VI
K_LIN_15
0.35
GR/VI
K_LIN_15
0.35
GR/VI
27 X28*1B
FAT_LIN
0.35
WS/BL
24 X8*1B
FAT_LIN
0.35
WS/GN
27 X5*1B
BFT_LIN
0.35
WS/BL
24 X9*1B
BFT_LIN
0.35
WS/GN
2 E126*1B
E126
Interior light, rear right
X140*1V
X140*1V
X1323*1V
X1323*1V
X1323*1V
X550*1V
X550*1V
X1324*1V
X1324*1V
X1324*1V
FAT_LIN
0.35
WS/BL
FAT_LIN
0.35
WS/BL
FAT_LIN
0.35
WS/GN
FAT_LIN
0.35
WS/GN
FAT_LIN
0.35
WS/GN
BFT_LIN
0.35
WS/BL
BFT_LIN
0.35
WS/BL
BFT_LIN
0.35
WS/GN
BFT_LIN
0.35
WS/GN
BFT_LIN
0.35
WS/GN
2 E125*1B
E125
Interior light, rear left
1 A334*1B
A334
Driver's side rear power window drive with control electronics
1 A335*1B
A335
Passenger's side rear power window drive with control electronics
with panoramic roof
5 S79*1B
S79a
Switch block of driver's side rear roller sunblind
5 S80*1B
S80a
Switch block of passenger's side rear roller sunblind
2 E81*1B
E81
Interior light, rear
2 S27*1B
S27
Seat switch cluster, rear driver's side door
2 S28*1B
S28
Seat switch cluster, rear passenger's side door
without panoramic roof
1 A279*1B
A279
Driver's door power window drive with control electronics
1 A280*1B
A280
Front passenger door power window drive with control electronics
2 S19*1B
S19
Seat switch cluster on driver's door
2 S23*1B
S23
Seat switch cluster on passenger's door

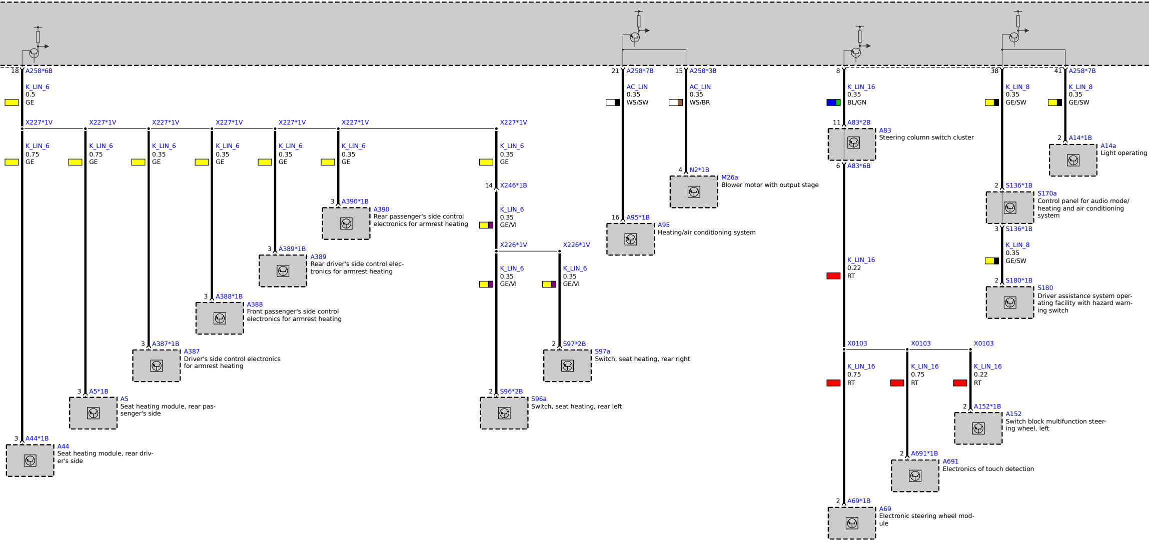
18 A258*6B
K_LIN_6
0.5
GE
X227*1V
K_LIN_6
0.75
GE
3 A44*1B
A44
Seat heating module, rear driver's side
X227*1V
K_LIN_6
0.75
GE
3 A5*1B
A5
Seat heating module, rear passenger's side
X227*1V
K_LIN_6
0.35
GE
3 A387*1B
A387
Driver's side control electronics for armrest heating
X227*1V
K_LIN_6
0.35
GE
3 A388*1B
A388
Front passenger's side control electronics for armrest heating
X227*1V
K_LIN_6
0.35
GE
3 A389*1B
A389
Rear driver's side control electronics for armrest heating
X227*1V
K_LIN_6
0.35
GE
3 A390*1B
A390
Rear passenger's side control electronics for armrest heating
X227*1V
K_LIN_6
0.35
GE
14 X246*1B
K_LIN_6
0.35
GE/VI
X226*1V
K_LIN_6
0.35
GE/VI
2 S96*2B
S96a
Switch, seat heating, rear left
X226*1V
K_LIN_6
0.35
GE/VI
2 S97*2B
S97a
Switch, seat heating, rear right
21 A258*7B
AC_LIN
0.35
WS/SW
16 A95*1B
A95
Heating/air conditioning system
15 A258*3B
AC_LIN
0.35
WS/BR
4 N2*1B
M26a
Blower motor with output stage
8
K_LIN_16
0.35
BL/GN
11 A83*2B
A83
Steering column switch cluster
6 A83*6B
K_LIN_16
0.22
RT
X0103
K_LIN_16
0.75
RT
2 A69*1B
A69
Electronic steering wheel module
X0103
K_LIN_16
0.75
RT
2 A691*1B
A691
Electronics of touch detection
X0103
K_LIN_16
0.22
RT
2 A152*1B
A152
Switch block multifunction steering wheel, left
38
K_LIN_8
0.35
GE/SW
2 S136*1B
S170a
Control panel for audio mode/heating and air conditioning system
3 S136*1B
K_LIN_8
0.35
GE/SW
2 S180*1B
S180
Driver assistance system operating facility with hazard warning switch
41 A258*7B
K_LIN_8
0.35
GE/SW
2 A14*1B
A14a
Light operating

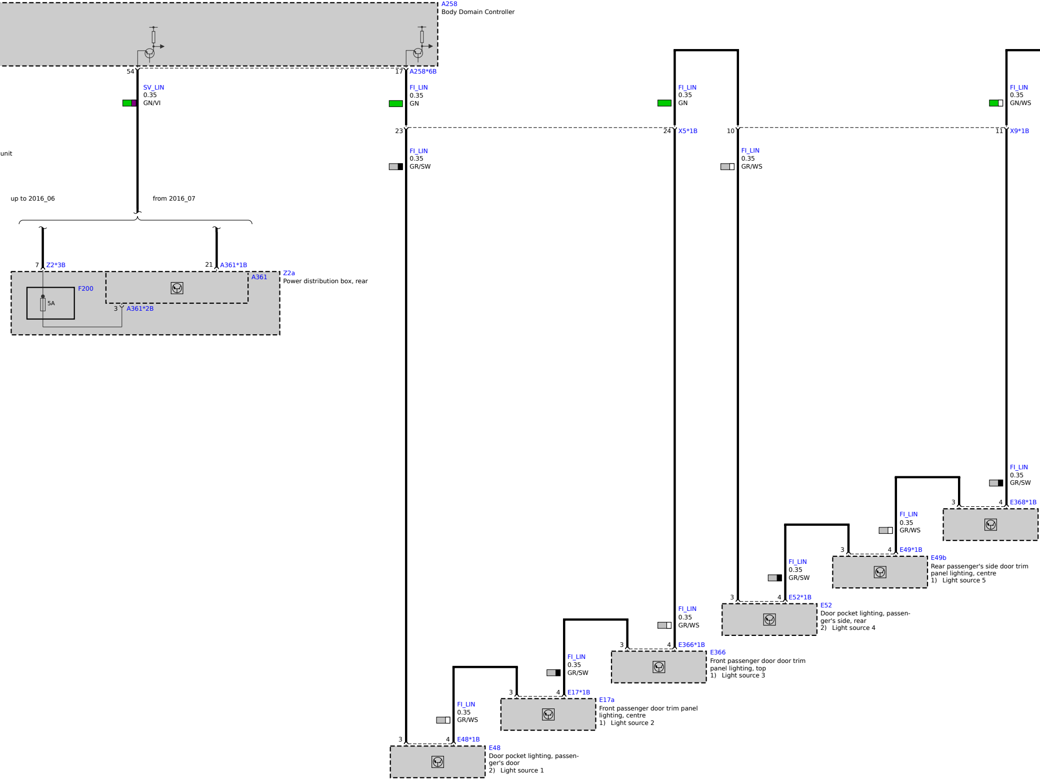
A258
Body Domain Controller
54
17
A258*6B
SV_LIN
0.35
GN/VI
FI_LIN
0.35
GN
FI_LIN
0.35
GN
FI_LIN
0.35
GN/WS
23
24
X5*1B
10
11
X9*1B
unit
FI_LIN
0.35
GR/SW
FI_LIN
0.35
GR/WS
up to 2016_06
from 2016_07
7
Z2*3B
21
A361*1B
A361
Z2a
Power distribution box, rear
F200
5A
3
A361*2B
FI_LIN
0.35
GR/SW
3
4
E368*1B
FI_LIN
0.35
GR/WS
3
4
E49*1B
E49b
Rear passenger's side door trim panel lighting, centre
1) Light source 5
FI_LIN
0.35
GR/SW
3
4
E52*1B
E52
Door pocket lighting, passenger's side, rear
2) Light source 4
FI_LIN
0.35
GR/WS
3
4
E366*1B
E366
Front passenger door door trim panel lighting, top
1) Light source 3
FI_LIN
0.35
GR/SW
3
4
E17*1B
E17a
Front passenger door trim panel lighting, centre
1) Light source 2
FI_LIN
0.35
GR/WS
3
4
E48*1B
E48
Door pocket lighting, passenger's door
2) Light source 1

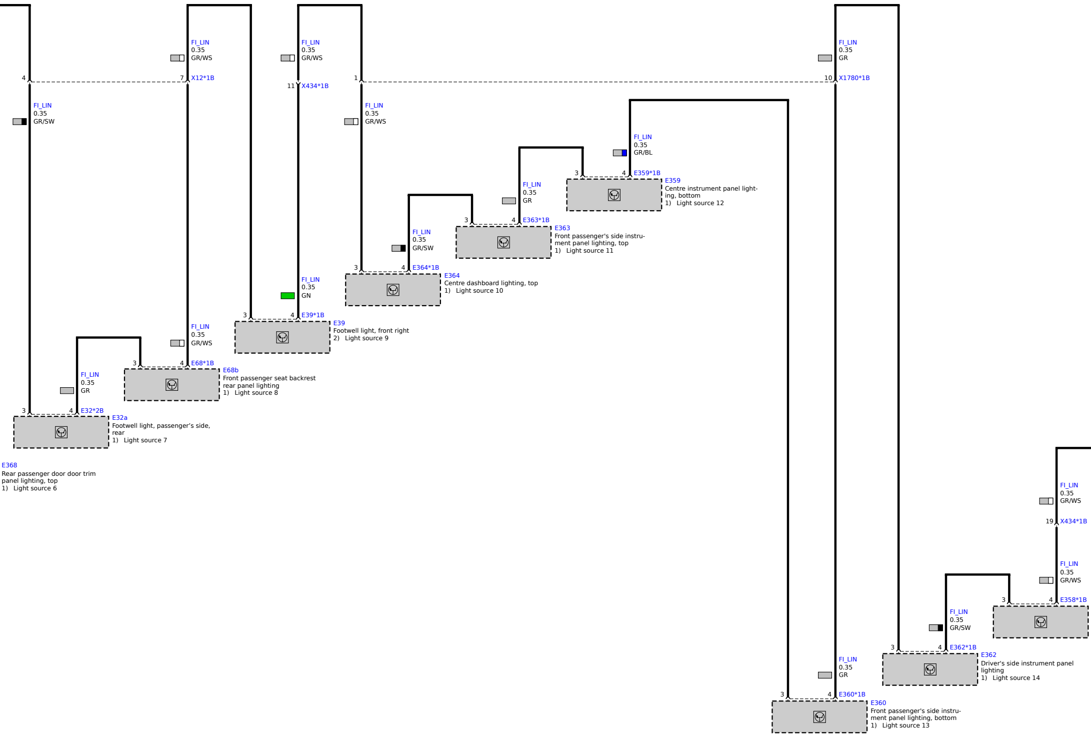
FI_LIN
0.35
GR/WS
FI_LIN
0.35
GR/WS
FI_LIN
0.35
GR
4
7
X12*1B
11
X434*1B
1
10
X1780*1B
FI_LIN
0.35
GR/SW
FI_LIN
0.35
GR/WS
FI_LIN
0.35
GR/BL
3
4
E359*1B
E359
Centre instrument panel lighting, bottom
1) Light source 12
FI_LIN
0.35
GR
3
4
E363*1B
E363
Front passenger's side instrument panel lighting, top
1) Light source 11
FI_LIN
0.35
GR/SW
3
4
E364*1B
E364
Centre dashboard lighting, top
1) Light source 10
FI_LIN
0.35
GN
3
4
E39*1B
E39
Footwell light, front right
2) Light source 9
FI_LIN
0.35
GR/WS
3
4
E68*1B
E68b
Front passenger seat backrest rear panel lighting
1) Light source 8
FI_LIN
0.35
GR
3
4
E32*2B
E32a
Footwell light, passenger's side, rear
1) Light source 7
E368
Rear passenger door door trim panel lighting, top
1) Light source 6
FI_LIN
0.35
GR/WS
19
X434*1B
FI_LIN
0.35
GR/WS
3
4
E358*1B
FI_LIN
0.35
GR/SW
3
4
E362*1B
E362
Driver's side instrument panel lighting
1) Light source 14
FI_LIN
0.35
GR
3
4
E360*1B
E360
Front passenger's side instrument panel lighting, bottom
1) Light source 13

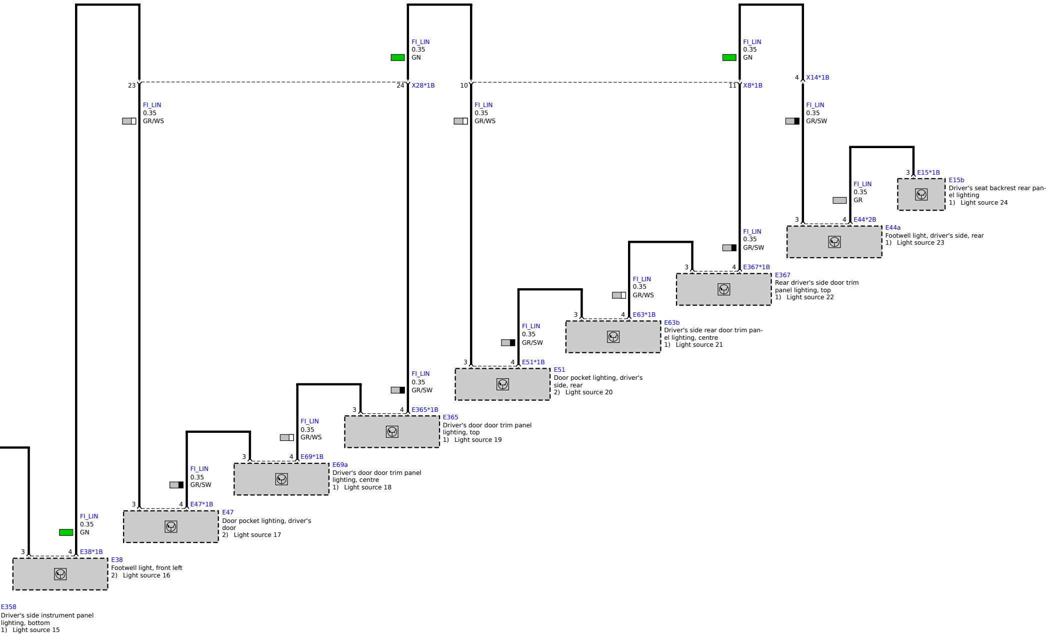

FI_LIN
0.35
GN
FI_LIN
0.35
GN
23
24
X28*1B
10
11
X8*1B
4
X14*1B
FI_LIN
0.35
GR/WS
FI_LIN
0.35
GR/WS
FI_LIN
0.35
GR/SW
3
E15*1B
E15b
Driver's seat backrest rear panel lighting
1) Light source 24
FI_LIN
0.35
GR
3
4
E44*2B
E44a
Footwell light, driver's side, rear
1) Light source 23
FI_LIN
0.35
GR/SW
3
4
E367*1B
E367
Rear driver's side door trim panel lighting, top
1) Light source 22
FI_LIN
0.35
GR/WS
3
4
E63*1B
E63b
Driver's side rear door trim panel lighting, centre
1) Light source 21
FI_LIN
0.35
GR/SW
3
4
E51*1B
E51
Door pocket lighting, driver's side, rear
2) Light source 20
FI_LIN
0.35
GR/SW
3
4
E365*1B
E365
Driver's door door trim panel lighting, top
1) Light source 19
FI_LIN
0.35
GR/WS
3
4
E69*1B
E69a
Driver's door door trim panel lighting, centre
1) Light source 18
FI_LIN
0.35
GR/SW
3
4
E47*1B
E47
Door pocket lighting, driver's door
2) Light source 17
FI_LIN
0.35
GN
3
4
E38*1B
E38
Footwell light, front left
2) Light source 16
E358
Driver's side instrument panel lighting, bottom
1) Light source 15