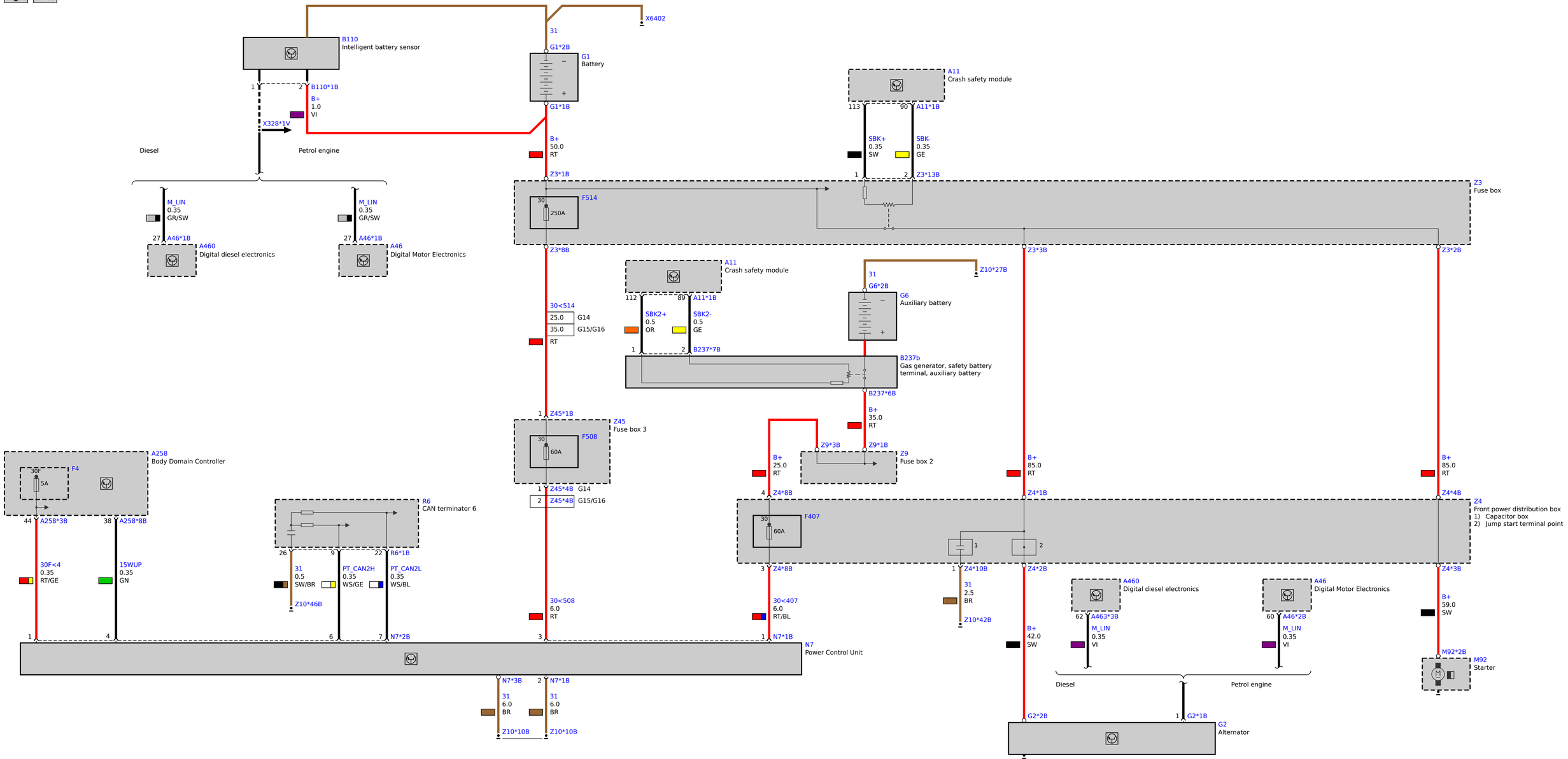
B110
Intelligent battery sensor
B110*1B
B+
1.0
VI
X328*1V
Diesel
Petrol engine
M_LIN
0.35
GR/SW
A46*1B
A460
Digital diesel electronics
A46
Digital Motor Electronics
X6402
31
G1*2B
G1
Battery
G1*1B
B+
50.0
RT
Z3*1B
F514
250A
Z3*8B
30<514
25.0
G14
35.0
G15/G16
RT
Z45*1B
Z45
Fuse box 3
F508
60A
Z45*4B
G14
Z45*4B
G15/G16
30<508
6.0
RT
A11
Crash safety module
A11*1B
SBK+
0.35
SW
SBK-
0.35
GE
Z3*13B
Z3
Fuse box
Z3*3B
Z3*2B
SBK2+
0.5
OR
SBK2-
0.5
GE
B237*7B
Z10*27B
G6*2B
G6
Auxiliary battery
B237b
Gas generator, safety battery terminal, auxiliary battery
B237*6B
B+
35.0
RT
Z9*3B
Z9*1B
Z9
Fuse box 2
B+
25.0
RT
Z4*8B
F407
60A
30<407
6.0
RT/BL
N7*1B
N7
Power Control Unit
B+
85.0
RT
Z4*1B
Z4*2B
Z4*3B
Z4
Front power distribution box
1) Capacitor box
2) Jump start terminal point
Z4*10B
31
2.5
BR
Z10*42B
B+
42.0
SW
G2*2B
G2*1B
G2
Alternator
A460
Digital diesel electronics
A463*3B
M_LIN
0.35
VI
A46
Digital Motor Electronics
A46*2B
M_LIN
0.35
VI
Diesel
Petrol engine
B+
59.0
SW
M92*2B
M92
Starter
A258
Body Domain Controller
F4
30F
5A
A258*3B
A258*8B
30F<4
0.35
RT/GE
15WUP
0.35
GN
R6
CAN terminator 6
R6*1B
31
0.5
SW/BR
Z10*46B
PT_CAN2H
0.35
WS/GE
PT_CAN2L
0.35
WS/BL
N7*2B
N7*3B
N7*1B
31
6.0
BR
Z10*10B
Z10*10B