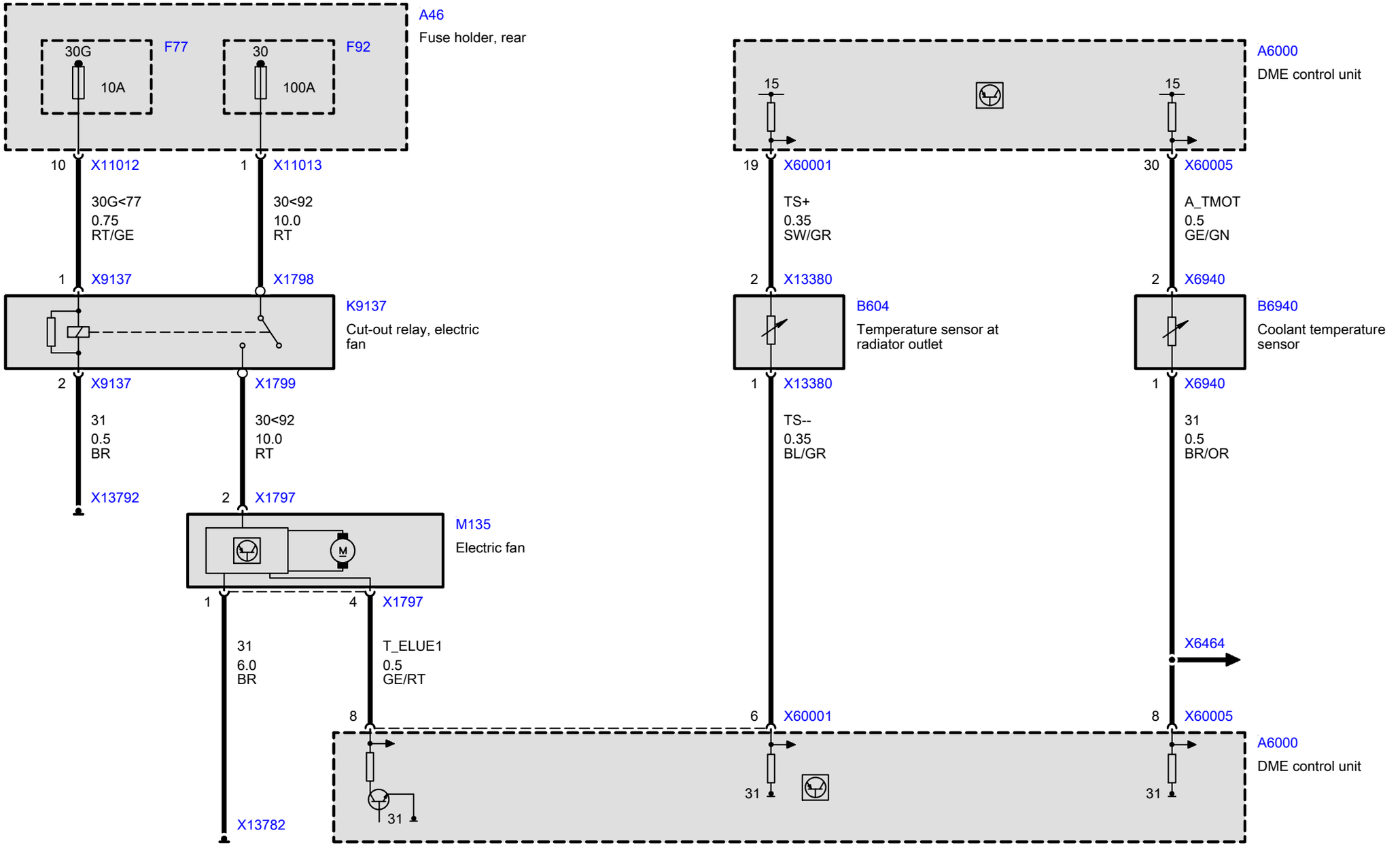
A46
Fuse holder, rear
30G
F77
10A
30
F92
100A
10
X11012
1
X11013
30G<77
0.75
RT/GE
30<92
10.0
RT
1
X9137
X1798
K9137
Cut-out relay, electric fan
2
X9137
X1799
31
0.5
BR
30<92
10.0
RT
X13792
2
X1797
M135
Electric fan
1
4
X1797
31
6.0
BR
T_ELUE1
0.5
GE/RT
8
X13782
31
A6000
DME control unit
15
15
19
X60001
30
X60005
TS+
0.35
SW/GR
A_TMOT
0.5
GE/GN
2
X13380
2
X6940
B604
Temperature sensor at radiator outlet
B6940
Coolant temperature sensor
1
X13380
1
X6940
TS--
0.35
BL/GR
31
0.5
BR/OR
X6464
6
X60001
8
X60005
A6000
DME control unit
31
31