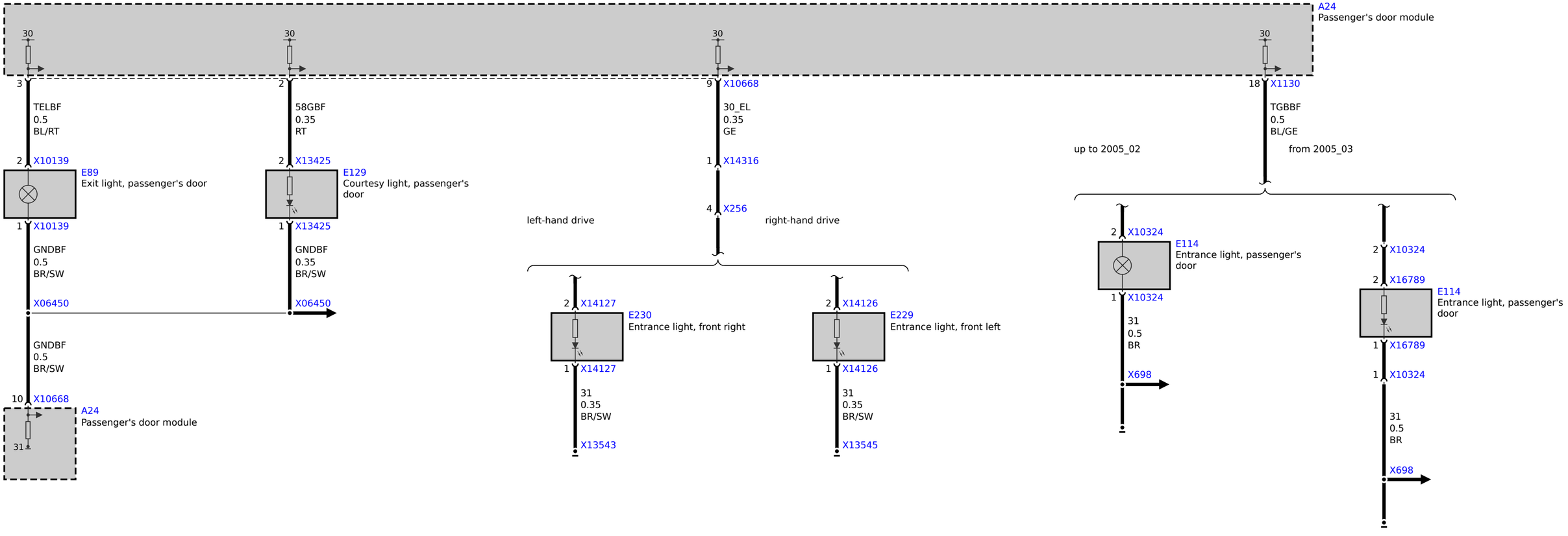
A24
Passenger's door module
30
3
TELBF
0.5
BL/RT
2
X10139
E89
Exit light, passenger's door
1
X10139
GNDBF
0.5
BR/SW
X06450
GNDBF
0.5
BR/SW
10
X10668
A24
Passenger's door module
31
2
58GBF
0.35
RT
2
X13425
E129
Courtesy light, passenger's door
1
X13425
GNDBF
0.35
BR/SW
X06450
9
X10668
30_EL
0.35
GE
1
X14316
4
X256
left-hand drive
right-hand drive
2
X14127
E230
Entrance light, front right
1
X14127
31
0.35
BR/SW
X13543
2
X14126
E229
Entrance light, front left
1
X14126
31
0.35
BR/SW
X13545
18
X1130
TGBBF
0.5
BL/GE
up to 2005_02
from 2005_03
2
X10324
E114
Entrance light, passenger's door
1
X10324
31
0.5
BR
X698
2
X10324
2
X16789
E114
Entrance light, passenger's door
1
X16789
1
X10324
31
0.5
BR
X698