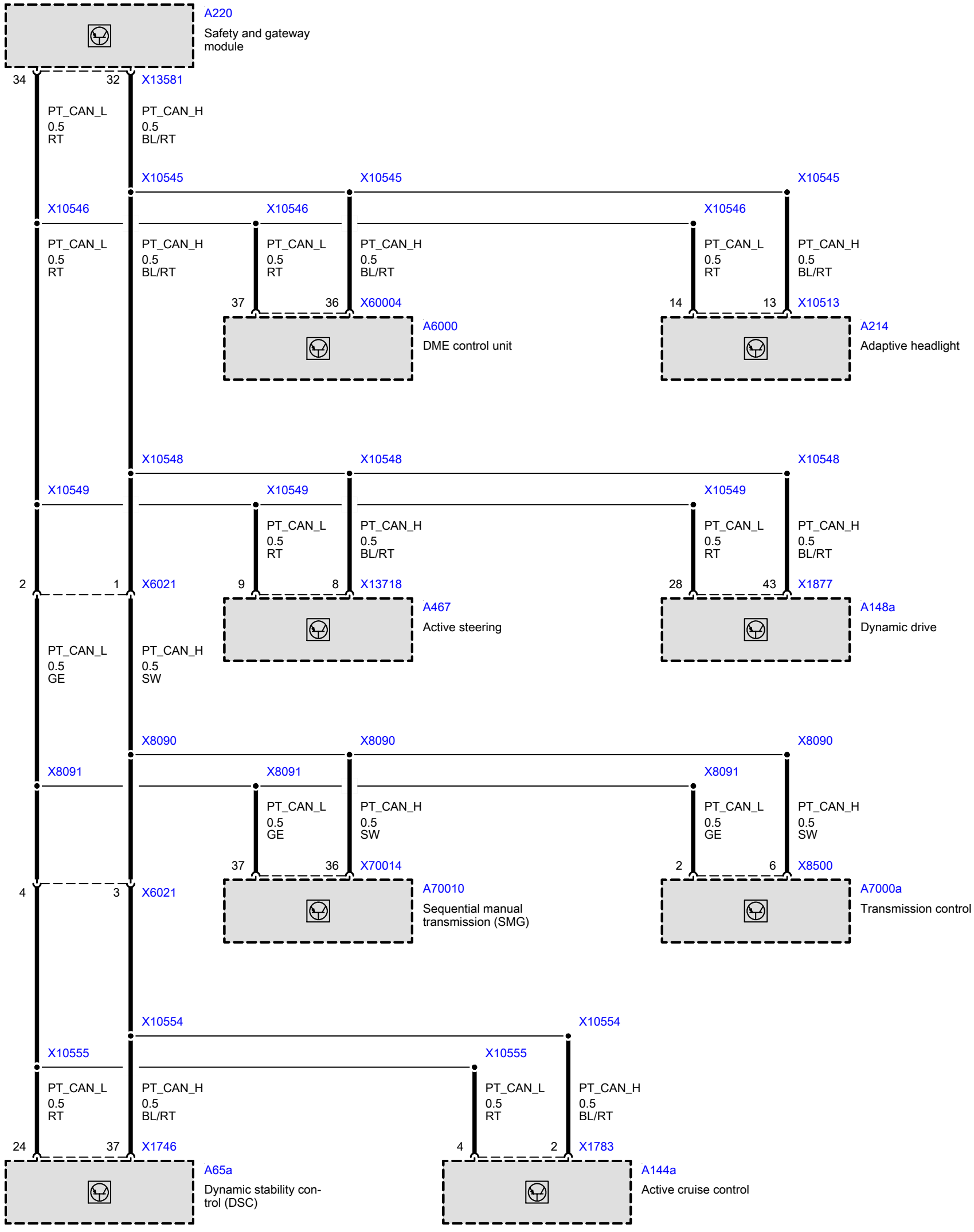
A220
Safety and gateway module
34
32
X13581
PT_CAN_L
0.5
RT
PT_CAN_H
0.5
BL/RT
X10545
X10546
X60004
37
36
A6000
DME control unit
14
13
X10513
A214
Adaptive headlight
X10548
X10549
X13718
9
8
A467
Active steering
28
43
X1877
A148a
Dynamic drive
2
1
X6021
GE
SW
X8090
X8091
X70014
A70010
Sequential manual transmission (SMG)
6
X8500
A7000a
Transmission control
4
3
X10554
X10555
X1746
24
A65a
Dynamic stability control (DSC)
X1783
A144a
Active cruise control