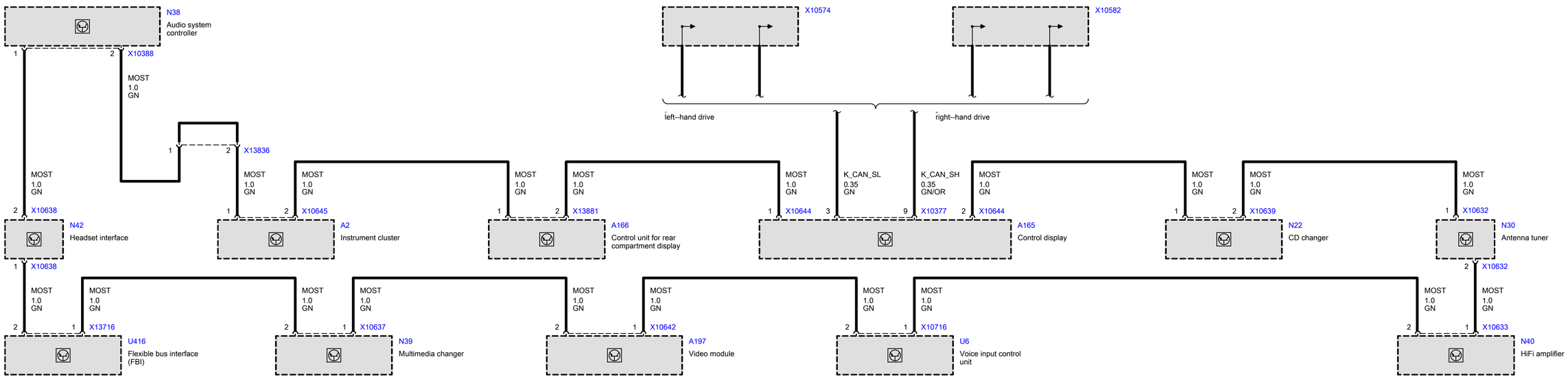
N38
Audio system controller
X10388
MOST 1.0 GN
X13836
X10574
X10582
left--hand drive
right--hand drive
MOST 1.0 GN
X10638
N42
Headset interface
X10645
A2
Instrument cluster
X13881
A166
Control unit for rear compartment display
X10644
K_CAN_SL 0.35 GN
K_CAN_SH 0.35 GN/OR
X10377
A165
Control display
X10639
N22
CD changer
X10632
N30
Antenna tuner
X13716
U416
Flexible bus interface (FBI)
X10637
N39
Multimedia changer
X10642
A197
Video module
X10716
U6
Voice input control unit
X10633
N40
HiFi amplifier