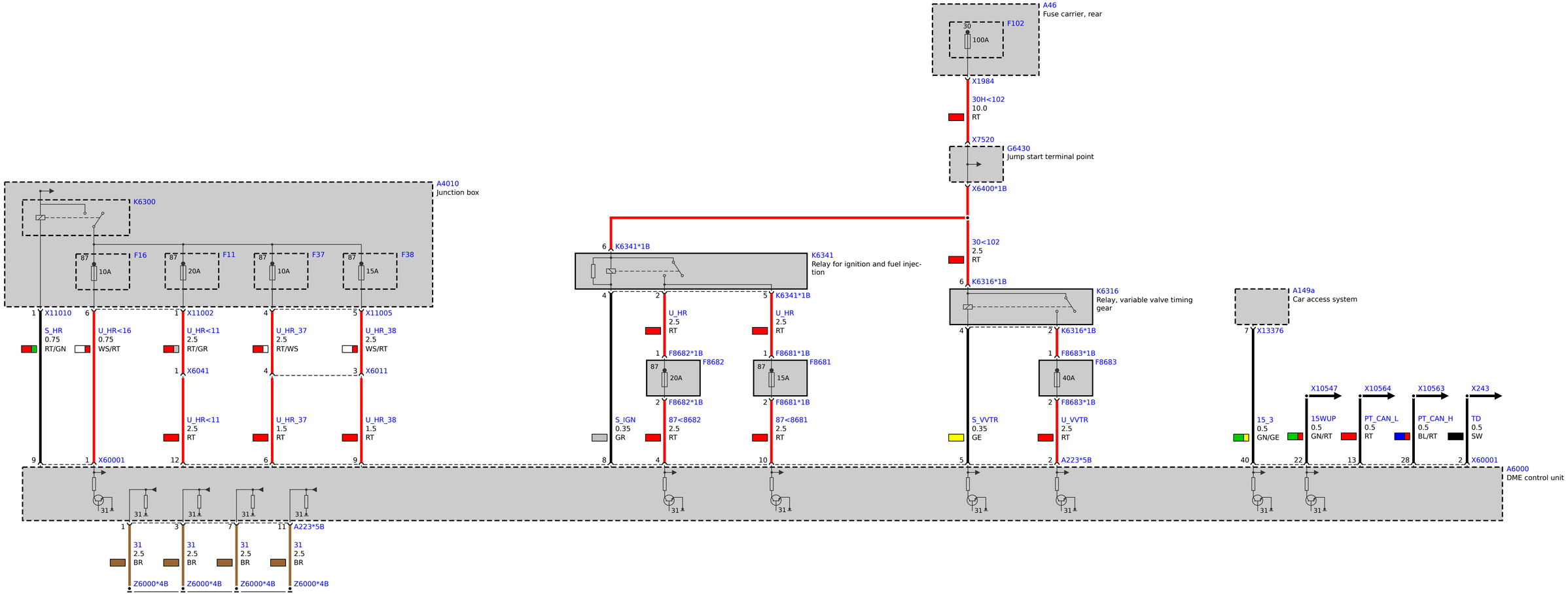
A46
Fuse carrier, rear
30
100A
F102
X1984
30H<102
10.0
RT
X7520
G6430
Jump start terminal point
X6400*1B
30<102
2.5
RT
A4010
Junction box
K6300
87
10A
F16
87
20A
F11
87
10A
F37
87
15A
F38
1 X11010
S_HR
0.75
RT/GN
6
U_HR<16
0.75
WS/RT
1 X11002
U_HR<11
2.5
RT/GR
1 X6041
U_HR<11
2.5
RT
4 X11005
U_HR_37
2.5
RT/WS
4
U_HR_37
1.5
RT
5 X11005
U_HR_38
2.5
WS/RT
3 X6011
U_HR_38
1.5
RT
9
1 X60001
12
6
9
6 K6341*1B
K6341
Relay for ignition and fuel injection
4
2
5 K6341*1B
U_HR
2.5
RT
1 F8682*1B
F8682
87
20A
2 F8682*1B
1 F8681*1B
F8681
87
15A
2 F8681*1B
S_IGN
0.35
GR
8
87<8682
2.5
RT
4
87<8681
2.5
RT
10
6 K6316*1B
K6316
Relay, variable valve timing gear
4
2 K6316*1B
1 F8683*1B
F8683
40A
2 F8683*1B
S_VVTR
0.35
GE
5
U_VVTR
2.5
RT
2 A223*5B
A149a
Car access system
7 X13376
15_3
0.5
GN/GE
40
X10547
15WUP
0.5
GN/RT
22
X10564
PT_CAN_L
0.5
RT
13
X10563
PT_CAN_H
0.5
BL/RT
28
X243
TD
0.5
SW
2 X60001
A6000
DME control unit
31
1
3
7
11 A223*5B
31
2.5
BR
Z6000*4B