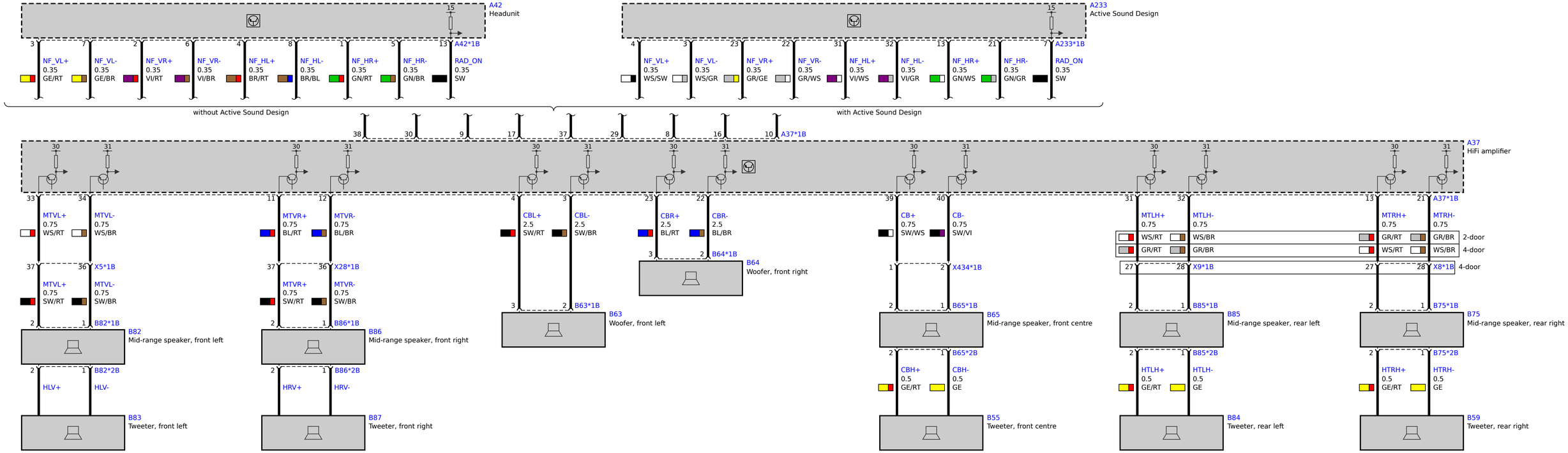
A42
Headunit
A42*1B
NF_VL+ 0.35 GE/RT
NF_VL- 0.35 GE/BR
NF_VR+ 0.35 VI/RT
NF_VR- 0.35 VI/BR
NF_HL+ 0.35 BR/RT
NF_HL- 0.35 BR/BL
NF_HR+ 0.35 GN/RT
NF_HR- 0.35 GN/BR
RAD_ON 0.35 SW
without Active Sound Design
A233
Active Sound Design
A233*1B
NF_VL+ 0.35 WS/SW
NF_VL- 0.35 WS/GR
NF_VR+ 0.35 GR/GE
NF_VR- 0.35 GR/WS
NF_HL+ 0.35 VI/WS
NF_HL- 0.35 VI/GR
NF_HR+ 0.35 GN/WS
NF_HR- 0.35 GN/GR
RAD_ON 0.35 SW
with Active Sound Design
A37*1B
A37
HiFi amplifier
MTVL+ 0.75 WS/RT
MTVL- 0.75 WS/BR
X5*1B
MTVL+ 0.75 SW/RT
MTVL- 0.75 SW/BR
B82*1B
B82
Mid-range speaker, front left
B82*2B
HLV+
HLV-
B83
Tweeter, front left
MTVR+ 0.75 BL/RT
MTVR- 0.75 BL/BR
X28*1B
MTVR+ 0.75 SW/RT
MTVR- 0.75 SW/BR
B86*1B
B86
Mid-range speaker, front right
B86*2B
HRV+
HRV-
B87
Tweeter, front right
CBL+ 2.5 SW/RT
CBL- 2.5 SW/BR
B63*1B
B63
Woofer, front left
CBR+ 2.5 BL/RT
CBR- 2.5 BL/BR
B64*1B
B64
Woofer, front right
CB+ 0.75 SW/WS
CB- 0.75 SW/VI
X434*1B
B65*1B
B65
Mid-range speaker, front centre
B65*2B
CBH+ 0.5 GE/RT
CBH- 0.5 GE
B55
Tweeter, front centre
MTLH+ 0.75
MTLH- 0.75
WS/RT
WS/BR
GR/RT
GR/BR
2-door
GR/RT
GR/BR
WS/RT
WS/BR
4-door
X9*1B
X8*1B
4-door
B85*1B
B85
Mid-range speaker, rear left
B85*2B
HTLH+ 0.5 GE/RT
HTLH- 0.5 GE
B84
Tweeter, rear left
MTRH+ 0.75
MTRH- 0.75
B75*1B
B75
Mid-range speaker, rear right
B75*2B
HTRH+ 0.5 GE/RT
HTRH- 0.5 GE
B59
Tweeter, rear right