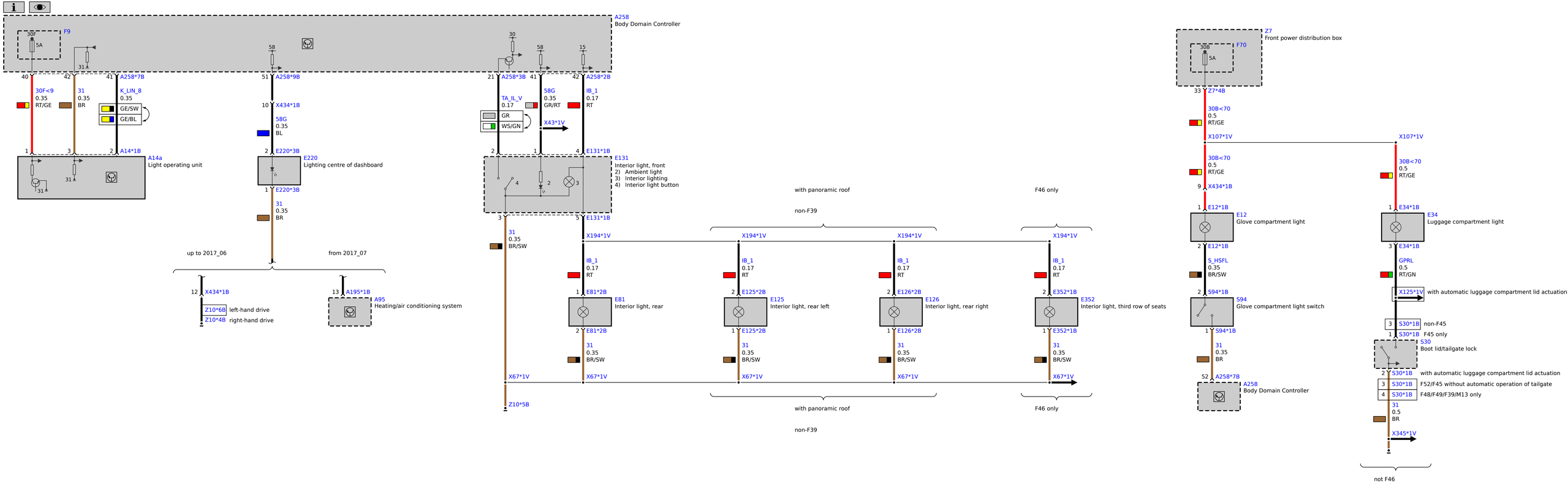
A258
Body Domain Controller
F9
30F
5A
31
40
42
41
A258*7B
30F<9
0.35
RT/GE
31
0.35
BR
K_LIN_8
0.35
GE/SW
GE/BL
1
3
2
A14*1B
A14a
Light operating unit
31
58
51
A258*9B
10
X434*1B
58G
0.35
BL
2
E220*3B
E220
Lighting centre of dashboard
1
E220*3B
31
0.35
BR
up to 2017_06
from 2017_07
12
X434*1B
Z10*6B
left-hand drive
Z10*4B
right-hand drive
13
A195*1B
A95
Heating/air conditioning system
30
58
15
21
A258*3B
41
42
A258*2B
TA_IL_V
0.17
GR
WS/GN
58G
0.35
GR/RT
IB_1
0.17
RT
X43*1V
2
1
4
E131*1B
E131
Interior light, front
2) Ambient light
3) Interior lighting
4) Interior light button
3
5
E131*1B
31
0.35
BR/SW
X194*1V
IB_1
0.17
RT
1
E81*2B
E81
Interior light, rear
2
E81*2B
31
0.35
BR/SW
X67*1V
Z10*5B
with panoramic roof
non-F39
X194*1V
IB_1
0.17
RT
2
E125*2B
E125
Interior light, rear left
1
E125*2B
31
0.35
BR/SW
X67*1V
X194*1V
IB_1
0.17
RT
2
E126*2B
E126
Interior light, rear right
1
E126*2B
31
0.35
BR/SW
X67*1V
with panoramic roof
non-F39
F46 only
X194*1V
IB_1
0.17
RT
2
E352*1B
E352
Interior light, third row of seats
1
E352*1B
31
0.35
BR/SW
X67*1V
F46 only
Z7
Front power distribution box
F70
30B
5A
33
Z7*4B
30B<70
0.5
RT/GE
X107*1V
30B<70
0.5
RT/GE
9
X434*1B
1
E12*1B
E12
Glove compartment light
2
E12*1B
S_HSFL
0.35
BR/SW
2
S94*1B
S94
Glove compartment light switch
1
S94*1B
31
0.35
BR
52
A258*7B
A258
Body Domain Controller
X107*1V
30B<70
0.5
RT/GE
1
E34*1B
E34
Luggage compartment light
3
E34*1B
GPRL
0.5
RT/GN
X125*1V
with automatic luggage compartment lid actuation
3
S30*1B
non-F45
1
S30*1B
F45 only
S30
Boot lid/tailgate lock
2
S30*1B
with automatic luggage compartment lid actuation
3
S30*1B
F52/F45 without automatic operation of tailgate
4
S30*1B
F48/F49/F39/M13 only
31
0.5
BR
X345*1V
not F46