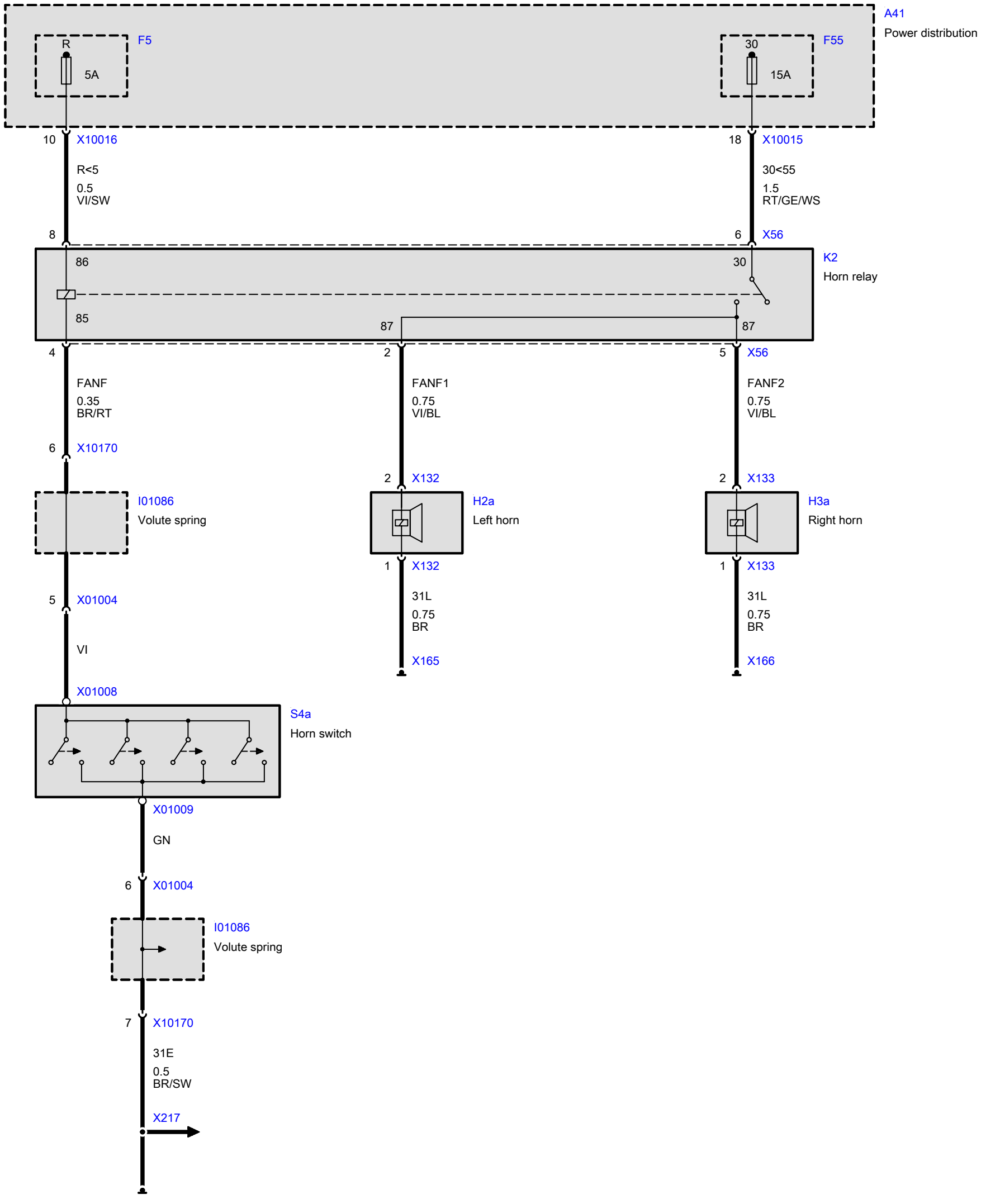
A41
Power distribution
R
F5
5A
30
F55
15A
10
X10016
R<5
0.5
VI/SW
18
X10015
30<55
1.5
RT/GE/WS
8
6
X56
86
30
K2
Horn relay
85
87
87
4
2
5
X56
FANF
0.35
BR/RT
FANF1
0.75
VI/BL
FANF2
0.75
VI/BL
6
X10170
2
X132
2
X133
I01086
Volute spring
H2a
Left horn
H3a
Right horn
1
X132
1
X133
5
X01004
31L
0.75
BR
31L
0.75
BR
VI
X165
X166
X01008
S4a
Horn switch
X01009
GN
6
X01004
I01086
Volute spring
7
X10170
31E
0.5
BR/SW
X217