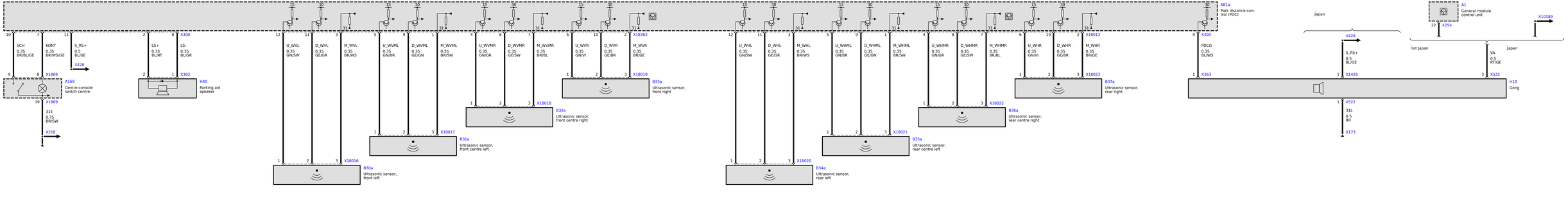
A81a
Park distance control (PDC)
A1
General module control unit
X254
X10189
Japan
not Japan
Japan
X428
S_RS+
0.5
BL/GE
X1426
VA
0.5
RT/GE
X522
H10
Gong
X522
31L
0.5
BR
X173
PDCG
0.35
BL/WS
X363
X18013
U_WHR
0.35
GN/VI
D_WHR
0.35
GE/BR
M_WHR
0.35
BR/GE
B37a
Ultrasonic sensor, rear right
X18022
U_WHMR
0.35
GN/GR
D_WHMR
0.35
GE/SW
M_WHMR
0.35
BR/BL
B36a
Ultrasonic sensor, rear centre right
X18021
U_WHL
0.35
GN/SW
D_WHL
0.35
GE/GR
M_WHL
0.35
BR/WS
B35a
Ultrasonic sensor, rear centre left
X18020
B34a
Ultrasonic sensor, rear left
X18019
U_WVR
0.35
GN/VI
D_WVR
0.35
GE/BR
M_WVR
0.35
BR/GE
B33a
Ultrasonic sensor, front right
X18018
U_WVMR
0.35
GN/GR
D_WVMR
0.35
GE/SW
M_WVMR
0.35
BR/BL
B32a
Ultrasonic sensor, front centre right
X18017
U_WVML
0.35
GN/BR
D_WVML
0.35
GE/GN
M_WVML
0.35
BR/SW
B31a
Ultrasonic sensor, front centre left
X18016
U_WVL
0.35
GN/SW
D_WVL
0.35
GE/GR
M_WVL
0.35
BR/WS
B30a
Ultrasonic sensor, front left
SCH
0.35
BR/BL/GE
KONT
0.35
BR/WS/GE
S_RS+
0.5
BL/GE
X428
X1869
A169
Centre console switch centre
X1869
31E
0.75
BR/SW
X21B
LS+
0.35
BL/RT
LS-
0.35
BL/GR
X300
X362
H40
Parking aid speaker