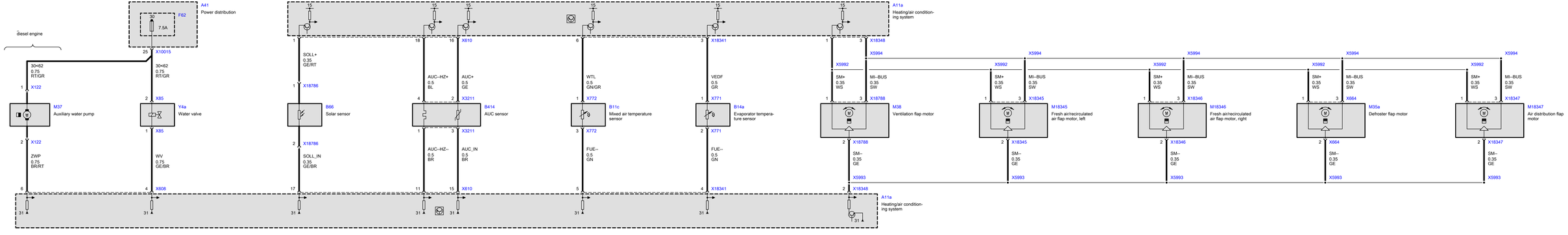
diesel engine
A41
Power distribution
F62
30
7.5A
25
X10015
30<62
0.75
RT/GR
1
X122
M37
Auxiliary water pump
2
X122
ZWP
0.75
BR/RT
6
30<62
0.75
RT/GR
2
X85
Y4a
Water valve
1
X85
WV
0.75
GE/BR
4
X608
15
SOLL+
0.35
GE/RT
1
X18786
B66
Solar sensor
2
X18786
SOLL_IN
0.35
GE/BR
17
18
16
X610
AUC–HZ+
0.5
BL
4
2
X3211
B414
AUC sensor
1
3
X3211
AUC–HZ–
0.5
BR
11
AUC+
0.5
GE
15
X610
AUC_IN
0.5
BR
15
WTL
0.5
GN/GR
1
X772
B11c
Mixed air temperature sensor
3
X772
FUE–
0.5
GN
5
15
X18341
VEDF
0.5
GR
1
X771
B14a
Evaporator temperature sensor
2
X771
FUE–
0.5
GN
4
X18341
15
A11a
Heating/air conditioning system
1
3
X18348
X5994
X5992
SM+
0.35
WS
1
3
X18788
M38
Ventilation flap motor
2
X18788
SM–
0.35
GE
X5993
MI–BUS
0.35
SW
X18345
M18345
Fresh air/recirculated air flap motor, left
X18346
M18346
Fresh air/recirculated air flap motor, right
X664
M35a
Defroster flap motor
X18347
M18347
Air distribution flap motor
2
X18348
A11a
Heating/air conditioning system
31