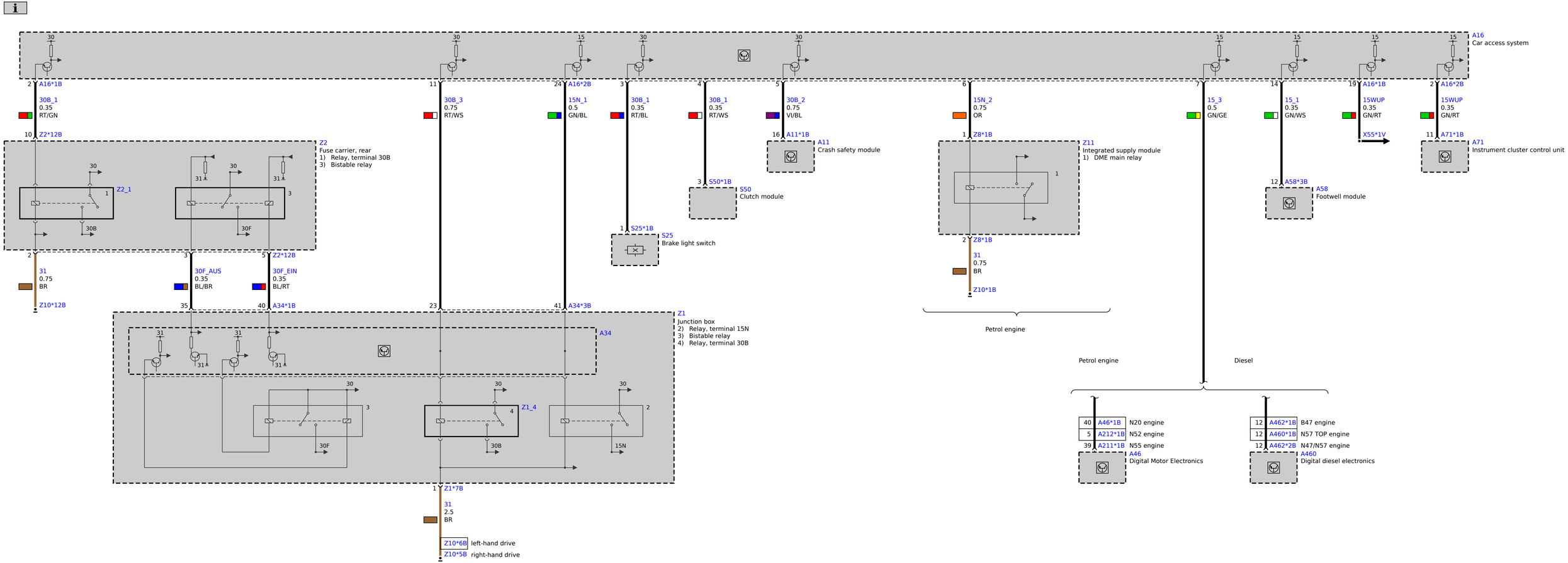
A16
Car access system
A16*1B
30B_1
0.35
RT/GN
Z2*12B
Z2
Fuse carrier, rear
1) Relay, terminal 30B
3) Bistable relay
Z2_1
31
0.75
BR
Z10*12B
30F_AUS
0.35
BL/BR
30F_EIN
0.35
BL/RT
A34*1B
A16*2B
30B_3
0.75
RT/WS
15N_1
0.5
GN/BL
A34*3B
Z1
Junction box
2) Relay, terminal 15N
3) Bistable relay
4) Relay, terminal 30B
A34
Z1_4
Z1*7B
2.5
Z10*6B left-hand drive
Z10*5B right-hand drive
30B_1
0.35
RT/BL
S25*1B
S25
Brake light switch
S50*1B
S50
Clutch module
30B_2
0.75
VI/BL
A11*1B
A11
Crash safety module
15N_2
0.75
OR
Z8*1B
Z11
Integrated supply module
1) DME main relay
Z10*1B
Petrol engine
15_3
0.5
GN/GE
15_1
0.35
GN/WS
A58*3B
A58
Footwell module
15WUP
0.35
GN/RT
X55*1V
A71*1B
A71
Instrument cluster control unit
Petrol engine
Diesel
A46*1B N20 engine
A212*1B N52 engine
A211*1B N55 engine
A46
Digital Motor Electronics
A462*1B B47 engine
A460*1B N57 TOP engine
A462*2B N47/N57 engine
A460
Digital diesel electronics